US006929864B2

(12) **United States Patent**
Fleming et al.

(10) **Patent No.: US 6,929,864 B2**
(45) **Date of Patent: *Aug. 16, 2005**

(54) **EXTENSIBLE, VISIBLE LIGHT-TRANSMISSIVE AND INFRARED-REFLECTIVE FILM AND METHODS OF MAKING AND USING THE FILM**

(75) Inventors: **Robert James Fleming**, Saint Paul, MN (US); **Clark Ivan Bright**, Tucson, AZ (US); **Christopher Stewart Lyons**, Saint Paul, MN (US)

(73) Assignee: **3M Innovative Properties Company**, St. Paul, MN (US)

(*) Notice: Subject to any disclaimer, the term of this patent is extended or adjusted under 35 U.S.C. 154(b) by 0 days.

This patent is subject to a terminal disclaimer.

(21) Appl. No.: **10/222,466**

(22) Filed: **Aug. 17, 2002**

(65) **Prior Publication Data**

US 2004/0033675 A1 Feb. 19, 2004

(51) **Int. Cl.**[7] **B32B 15/08**; B32B 31/00; C08J 7/04; G02C 7/00

(52) **U.S. Cl.** **428/457**; 428/461; 428/463; 427/487; 427/488; 427/509; 156/99; 156/229

(58) **Field of Search** 428/457, 461, 428/463; 156/99, 229; 427/487, 488, 509

(56) **References Cited**

U.S. PATENT DOCUMENTS

3,302,002	A	1/1967	Warren
3,311,517	A	3/1967	Keslar et al.
3,529,074	A	9/1970	Lewis
3,601,471	A	8/1971	Seddon et al.
3,682,528	A	8/1972	Apfel et al.
3,752,348	A	8/1973	Dickason et al.
3,897,140	A	7/1975	Tuthill

(Continued)

FOREIGN PATENT DOCUMENTS

EP	0 722 787	A	7/1996
EP	0 810 452	A2	12/1997
EP	0 839 643		5/1998
EP	0873839	A1	10/1998
EP	0944299	A3	9/1999
EP	0944299	A2	9/1999
EP	0977167	A1	2/2000
WO	WO 92/12219		7/1992
WO	WO 95/10117		4/1995
WO	WO 97/01440		1/1997
WO	WO 97/01778		1/1997
WO	WO 97/04885		2/1997
WO	WO 98/26927		6/1998
WO	WO 99/36248		7/1999
WO	WO 99/36262		7/1999
WO	WO 00/26973		5/2000
WO	WO 00/48749		8/2000
WO	WO 01/31393	A1	5/2001
WO	WO 01/58989		8/2001
WO	WO 01/96104	A2	12/2001
WO	WO 01/96115	A1	12/2001

OTHER PUBLICATIONS

Affinito, J.D., "*Vacuum deposited polymer/silver reflector material*", SPIE Press, vol. 2262, Jul. 25, 1994, pp. 276–283.

(Continued)

Primary Examiner—Monique R. Jackson
(74) *Attorney, Agent, or Firm*—Pamela L. Stewart

(57) **ABSTRACT**

A film contains first and second metal or metal alloy layers separated by a crosslinked polymeric spacing layer whose thicknesses are such that the film is extensible visible light-transmissive and infrared reflective. The film can be joined or laminated into glazing (especially non-planar vehicular safety glazing) with reduced likelihood that the metal or metal alloy layers will be damaged or distorted.
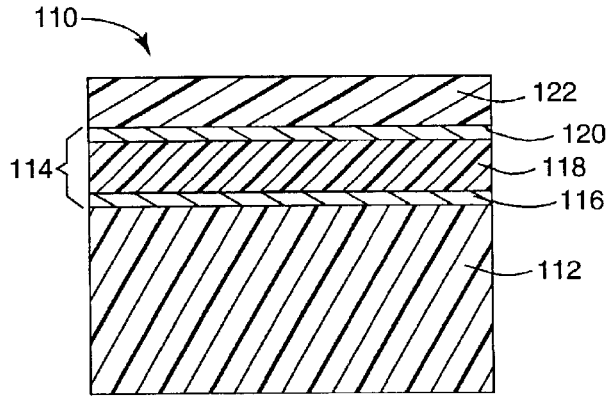
36 Claims, 9 Drawing Sheets