US006321764B1

(12) **United States Patent**
Gauger et al.

(10) **Patent No.: US 6,321,764 B1**
(45) **Date of Patent: Nov. 27, 2001**

(54) **COLLAPSIBLE ISOLATION APPARATUS**

(75) Inventors: **James R. Gauger**, Highland Park; **Robert L. Mullins**, Chicago, both of IL (US); **George L. Stefanek**, Beverly Shores, IN (US); **Joseph J. Petrovic**, Burr Ridge, IL (US)

(73) Assignee: **IIT Research Institute**, Chicago, IL (US)

(*) Notice: Subject to any disclaimer, the term of this patent is extended or adjusted under 35 U.S.C. 154(b) by 0 days.

(21) Appl. No.: **09/379,962**

(22) Filed: **Aug. 24, 1999**

Related U.S. Application Data

(60) Provisional application No. 60/113,503, filed on Dec. 21, 1998.

(51) **Int. Cl.**[7] **E04H 15/36**
(52) **U.S. Cl.** **135/128**
(58) **Field of Search** 135/128, 116, 135/117; 128/202.16, 202.12

(56) **References Cited**

U.S. PATENT DOCUMENTS

2,683,262		7/1954	Foss	2/2
2,985,129		5/1961	Kirkpatrick	113/111
3,118,401		1/1964	Platt	109/1
3,119,358		1/1964	Colson et al.	109/1
3,265,059	*	8/1966	Matthews	135/117
3,272,199	*	9/1966	Matthews	135/117
3,695,507		10/1972	Sams	229/53
3,766,844		10/1973	Donnelly et al.	98/33
3,840,919	*	10/1974	Middleton	135/117
4,000,749		1/1977	Busco	135/1
4,198,996	*	4/1980	Keable et al.	135/128
4,352,991		10/1982	Kaufman	307/9
4,389,066		6/1983	Weir et al.	296/19
4,584,989		4/1986	Stith	128/1
4,736,762		4/1988	Wayman	135/88
5,314,377		5/1994	Pelosi, III	454/187
5,331,991		7/1994	Nilsson	135/93
5,343,887	*	9/1994	Danaher	135/128
5,626,151		5/1997	Linden	128/897
5,630,296		5/1997	Kendall, Jr.	52/2.11
5,725,426		3/1998	Alvarez	454/187
5,881,405	*	3/1999	Garrigues	135/117

* cited by examiner

Primary Examiner—Alvin Chin-Shue
Assistant Examiner—Sarah Purol
(74) *Attorney, Agent, or Firm*—Fitch, Even, Tabin & Flannery

(57) **ABSTRACT**

A collapsible personnel isolation apparatus for preventing unwanted contaminations of hazardous biological and chemical materials including a base. A cover connects to the base by way of a zipper. A plurality of glove box ports are provided to allow rapid and convenient treatment of the patient.
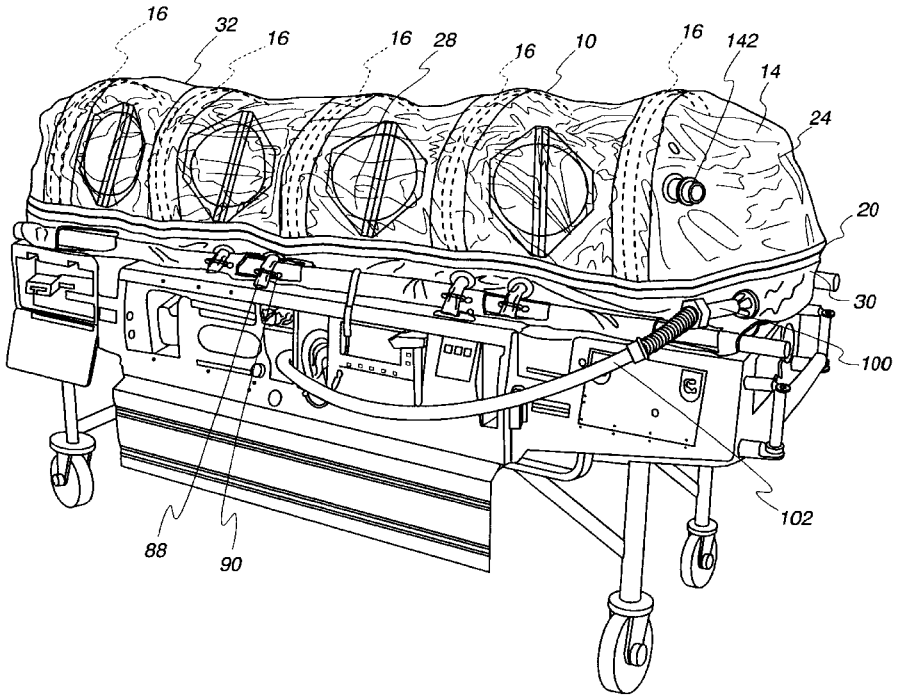
21 Claims, 10 Drawing Sheets