US005217464A

United States Patent [19]

McDonald

[11] Patent Number: 5,217,464

[45] Date of Patent: Jun. 8, 1993

[54] THREE BAR CROSS ACTION LENS IMPLANTATION FORCEPS

[75] Inventor: Henry H. McDonald, 65 N. Madison, Suite 81, Pasadena, Calif. 91101

[73] Assignees: Henry H. McDonald; William W. Haefliger, both of Pasadena, Calif. ; part interest to each

[21] Appl. No.: 890,810

[22] Filed: Jun. 1, 1992

[51] Int. Cl.[5] A61B 17/28; B25B 9/02

[52] U.S. Cl. 606/107; 606/206; 606/207; 623/6; 294/99.2; 24/552; 81/419

[58] Field of Search 623/6; 606/107, 205, 606/206, 207, 210; 294/1.2, 99.2; 24/551, 552, 553; 81/419, 420

[56] References Cited

U.S. PATENT DOCUMENTS

1,268,922	6/1918	Bryan	81/419 X
3,611,842	10/1971	Skipper	294/99.2
3,741,602	6/1973	Ploeckelmann	606/210 X
3,882,872	5/1975	Douvas et al.	606/107
4,198,980	4/1980	Clark	606/107
4,573,998	3/1986	Mazzocco	623/6
4,813,957	3/1989	McDonald	623/6
4,844,065	7/1989	Faulkner	606/107
4,957,505	9/1990	McDonald	623/6
4,959,070	9/1990	McDonald	623/6

FOREIGN PATENT DOCUMENTS

436232	7/1991	European Pat. Off.	606/107
52-14372	2/1977	Japan	294/99.2

Primary Examiner—Randall L. Green
Assistant Examiner—Mary Beth O. Jones
Attorney, Agent, or Firm—William W. Haefliger

[57] ABSTRACT

An apparatus for intraocular implantation of a plastic lens in the eye lens zone from which a natural lens has been removed via a surgical incision in the corneoscleral limbus comprising a surgical forceps having two arms and blades projecting beyond portions of the arms defining a cross-over locus, the blades clamping the plastic lens to be implanted; the blades including first and second spaced blades carried by one arm portion, and a third blade carried by the other arm portion, whereby stable three point support is provided for the lens during its passage through the incision into the eye.
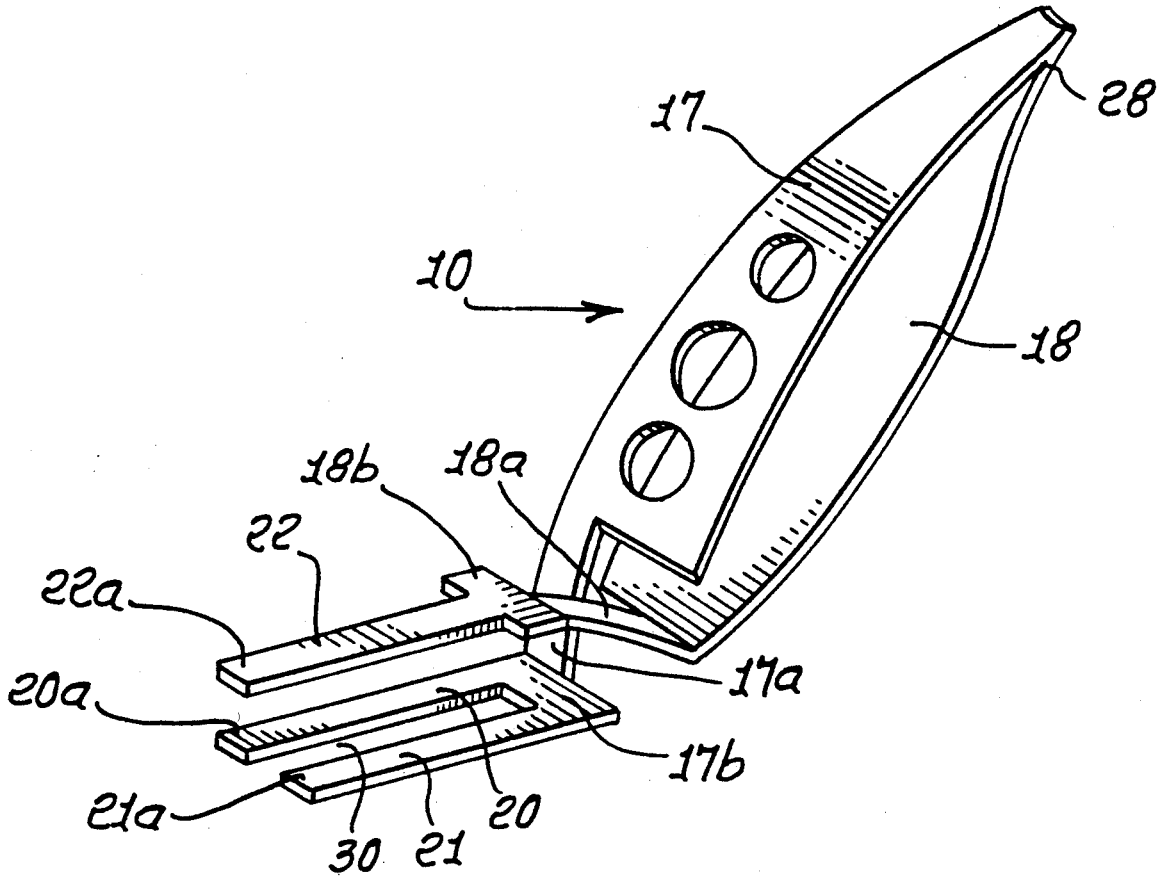
12 Claims, 2 Drawing Sheets