US006515764B1

(12) **United States Patent**
Knox et al.

(10) **Patent No.: US 6,515,764 B1**
(45) **Date of Patent: Feb. 4, 2003**

(54) **METHOD AND APPARATUS FOR DETECTING PHOTOCOPIER TRACKING SIGNATURES**

(75) Inventors: **Keith T. Knox**, Rochester, NY (US); **Zhigang Fan**, Webster, NY (US); **Erie J. Schneider**, Webster, NY (US)

(73) Assignee: **Xerox Corporation**, Stamford, CT (US)

(*) Notice: Subject to any disclaimer, the term of this patent is extended or adjusted under 35 U.S.C. 154(b) by 0 days.

(21) Appl. No.: **09/216,236**

(22) Filed: **Dec. 18, 1998**

(51) **Int. Cl.**[7] **G06F 15/00**; G03F 3/08; G06K 9/00

(52) **U.S. Cl.** **358/1.9**; 358/522; 382/167

(58) **Field of Search** 358/1–9, 515, 358/518, 504, 522–534, 540, 538; 382/168, 169, 170, 171, 119, 181, 182, 165

(56) **References Cited**

U.S. PATENT DOCUMENTS

4,805,016	A	*	2/1989	Kato	358/98
5,218,605	A	*	6/1993	Low et al.	371/16.1
5,510,199	A		4/1996	Martin	428/690
5,515,451	A		5/1996	Tsuji et al.	382/135
5,721,788	A	*	2/1998	Poell et al.	382/100
5,765,176	A	*	6/1998	Bloomberg	707/514
5,819,288	A	*	10/1998	De Bonet	707/104
5,862,150	A	*	1/1999	Lavelle et al.	371/22.4
5,867,595	A	*	2/1999	Cymbalski	358/515
6,064,764	A	*	5/2000	Bhaskaran et al.	382/183
6,222,932	B1	*	4/2001	Rao et al.	382/100

OTHER PUBLICATIONS

"Imaging the Dead Sea Scrolls", Keith Knox et al., Optics & Photonics News, Aug. 1997, vol. 8, No. 8.

* cited by examiner

Primary Examiner—Madeleine Nguyen
(74) *Attorney, Agent, or Firm*—Fay, Sharpe, Fagan, Minnich & McKee, LLP

(57) **ABSTRACT**

A method and apparatus are described for detecting photocopier tracking signatures placed on documents produced by color photocopiers. The apparatus includes an input terminal that supplies digital image data representing an input document produced by a color photocopier. The digital image data includes a plurality of pixel values grouped together to form a plurality of color separations that represent the input document. The apparatus also includes an image processing unit that generates an output image based on the digital image data. The image processing unit generates the output image based on differences between corresponding pixel values of at least two of the plurality of color separations. The apparatus further includes an output terminal for displaying the output image to view the photocopier tracking signature. Color differences can be detected by combining two or more of the color separations into a resulting monochromatic image and then enhancing the resulting color differences. The combination of the separations exposes small color differences that are not detectable in any of the individual separations, thus enabling the photocopier signature to be detected.
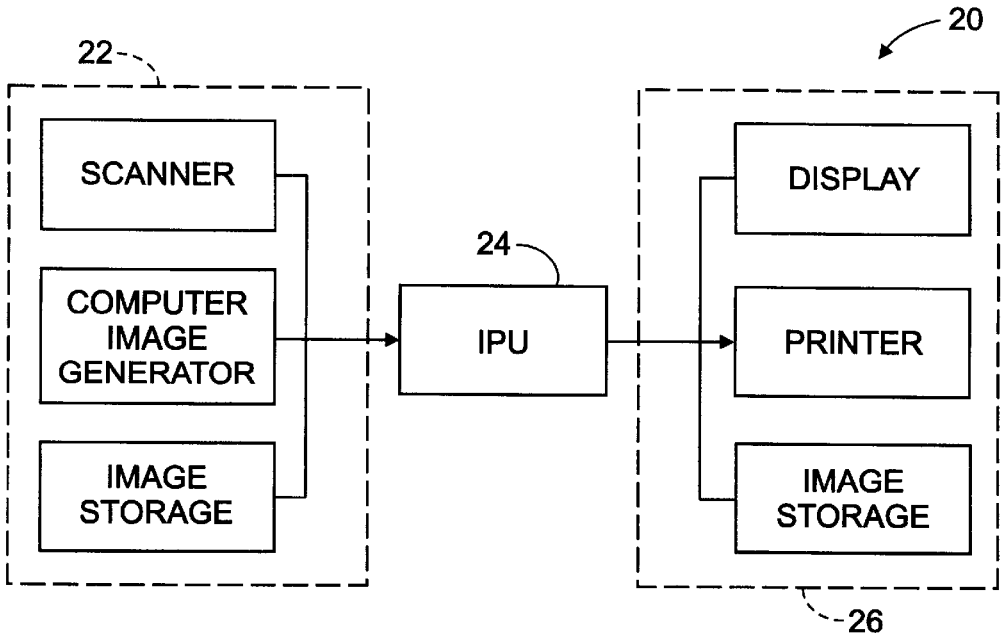
2 Claims, 2 Drawing Sheets