US005813764A

United States Patent [19]

Visser et al.

[11] **Patent Number: 5,813,764**

[45] **Date of Patent: Sep. 29, 1998**

[54] **CATALYTIC DIFFERENTIAL CALORIMETRIC GAS SENSOR**

[75] Inventors: **Jacobus Hendrik Visser**, Southfield; **Chaitanya Kumar Narula**, Ann Arbor; **Margherita Zanini-Fisher**, Bloomfield Township, all of Mich.

[73] Assignee: **Ford Global Technologies, Inc.**, Dearborn, Mich.

[21] Appl. No.: **940,144**

[22] Filed: **Sep. 29, 1997**

Related U.S. Application Data

[62] Division of Ser. No. 311,299, Sep. 23, 1994, Pat. No. 5,707,148.

[51] **Int. Cl.**[6] **G01N 25/20**; G01K 17/00

[52] **U.S. Cl.** **374/12**; 374/10; 374/31; 73/25.05; 422/51; 422/95; 431/76; 204/424; 60/276

[58] **Field of Search** 374/10, 12, 31, 374/36; 60/276; 422/51, 95, 94; 431/76; 502/407, 415, 326; 204/424; 73/25.03, 25.05

[56] **References Cited**

U.S. PATENT DOCUMENTS

4,355,056	10/1982	Dalla Betta et al.	427/126.4
4,378,385	3/1983	Hughes	427/126.3
4,560,585	12/1985	Khilnani	427/103
4,579,751	4/1986	Foster	427/54.1
4,699,892	10/1987	Suzuki	502/4
4,839,327	6/1989	Haruta et al.	502/243
5,134,107	7/1992	Narula	502/303
5,210,062	5/1993	Narula et al.	502/304
5,234,881	8/1993	Narula et al.	502/262
5,265,417	11/1993	Visser et al.	60/274
5,292,801	3/1994	Avnir et al.	525/54.1
5,340,548	8/1994	Abe et al.	422/177
5,431,012	7/1995	Narula et al.	60/276
5,451,371	9/1995	Zanini-Fisher et al.	422/51
5,480,622	1/1996	Narula et al.	422/174

FOREIGN PATENT DOCUMENTS

3839414A1	5/1990	Germany .	
55-156850	12/1980	Japan .	
0255649	10/1988	Japan	374/10
1145561	6/1989	Japan .	
2238617	11/1989	United Kingdom .	
WO9303840	3/1993	WIPO .	

OTHER PUBLICATIONS

"Sol–Gel Thin Film Formation", by C.J. Brinker et al, Journal of the Ceramic Society of Japan, vol. 99–843, Oct. 1991.

"Large Clusters and Colloids. Metals in the Embryonic State", by Gunter Schmid, Chem. Rev. 1992, 1709–1727. No Month.

"Ethanol Gas Sensing Properties of SnO2–based Thin–film Sensors Prepared by the Sol–gel Process", by Sung–Soon Park et al, Materials Letters, Oct. 1993, No. 6.

"The Si–Planar–Pellistor Array, a Detection Unit for Combustible Gases", by M. Gall, Sensors & Actuators, Oct. 1993, Nos. 1/3.

"Fabrication and Proeprties of a Si–Based High Sensitivity Microcalorimetric Gas Sensor", by. M. Zanini et al, Jun. 1994.

"Catalytic Calorimetric Gas Sensors", by J.H. Visser et al, 5th International Meeting on Chemical Sensors, Jul. 11–14, 1994.

Primary Examiner—Diego F. F. Gutierrez

Attorney, Agent, or Firm—Lorraine S. Melotik; Roger L. May

[57] **ABSTRACT**

A catalytic differential gas combustible microcalorimeter sensor for monitoring the exhaust gas conversion for monitoring the exhaust gas conversion efficiency of a catalytic converter. The catalytic calorimetric sensor disclosed includes a sol-gel processed washcoat and sol-processed catalytically active metal particles. Sol-gel processing creates a washcoat with high surface area and controlled porosity which increases the sensitivity, durability, and reproducibility of the resultant sensor.
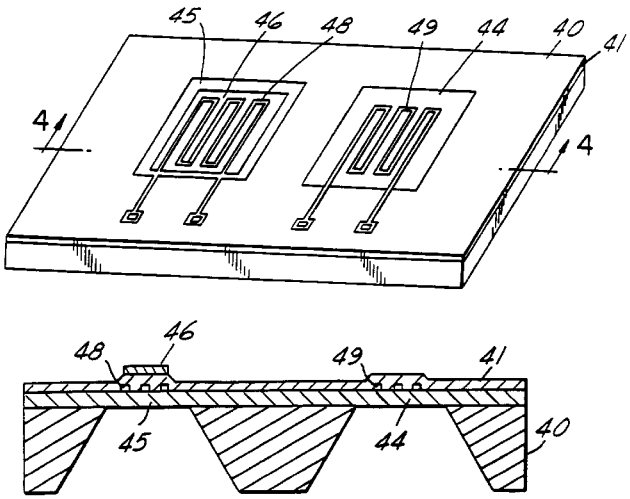
5 Claims, 3 Drawing Sheets