US009411064B2

(12) **United States Patent**
De Vries et al.

(10) **Patent No.: US 9,411,064 B2**
(45) **Date of Patent: Aug. 9, 2016**

(54) **TESTERS FOR ACOUSTIC SENSORS**

(75) Inventors: **Thomas De Vries**, Manama (BH); **Gary D. Althoff**, Houston, TX (US); **Eugene LaCarmie**, Lafayette, LA (US)

(73) Assignee: **Halliburton Energy Services, Inc.**, Houston, TX (US)

(*) Notice: Subject to any disclaimer, the term of this patent is extended or adjusted under 35 U.S.C. 154(b) by 237 days.

(21) Appl. No.: **14/008,409**

(22) PCT Filed: **Jul. 26, 2011**

(86) PCT No.: **PCT/US2011/045365**
§ 371 (c)(1),
(2), (4) Date: **Sep. 27, 2013**

(87) PCT Pub. No.: **WO2013/015790**
PCT Pub. Date: **Jan. 31, 2013**

(65) **Prior Publication Data**

US 2014/0137633 A1 May 22, 2014

(51) **Int. Cl.**

G01N 29/30	(2006.01)
G01V 1/40	(2006.01)
G01N 13/00	(2006.01)

(52) **U.S. Cl.**
CPC ***G01V 1/40*** (2013.01); ***G01N 13/00*** (2013.01); ***G01N 29/30*** (2013.01)

(58) **Field of Classification Search**
CPC G01N 29/30; G01N 29/024; G01H 3/005; G01V 13/00; G01V 1/40
USPC 73/1.82
See application file for complete search history.

(56) **References Cited**

U.S. PATENT DOCUMENTS

4,106,327	A *	8/1978	Adler	G01H 5/00 73/1.83
4,226,162	A	10/1980	Ebach	
5,437,178	A *	8/1995	Esin	G01F 23/296 367/7
5,837,880	A	11/1998	Shakinovsky et al.	
2010/0126275	A1	5/2010	Leyh et al.	

FOREIGN PATENT DOCUMENTS

DE	3807383	A1 *	9/1989	G06S 7/52004
GB	166512	A	4/1921	
GB	533508	A	8/1939	
WO	WO-2007097727	A1	8/2007	
WO	WO-2013015790	A1	1/2013	

OTHER PUBLICATIONS

"International Application Serial No. PCT/US2011/045365, International Preliminary Report on Patentability mailed Nov. 14, 2013", 16 pgs.
"International Application Serial No. PCT/US2011/045365, International Search Report mailed Apr. 2, 2012", 4 pgs.
"International Application Serial No. PCT/US2011/045365, Written Opinion mailed Apr. 2, 2012", 7 pgs.

* cited by examiner

Primary Examiner — Hezron E Williams
Assistant Examiner — Nashmiya Fayyaz
(74) *Attorney, Agent, or Firm* — Schwegman, Lundberg & Woessner, P.A.; Alan Bryson

(57) **ABSTRACT**

Various embodiments include apparatus and methods to test an acoustic sensor. Apparatus and methods can include collecting an acoustic wave from a transmitter of the acoustic sensor and directing the acoustic wave to a receiver of the acoustic sensor along a path different from the acoustic sensor. Additional apparatus, systems, and methods are disclosed.
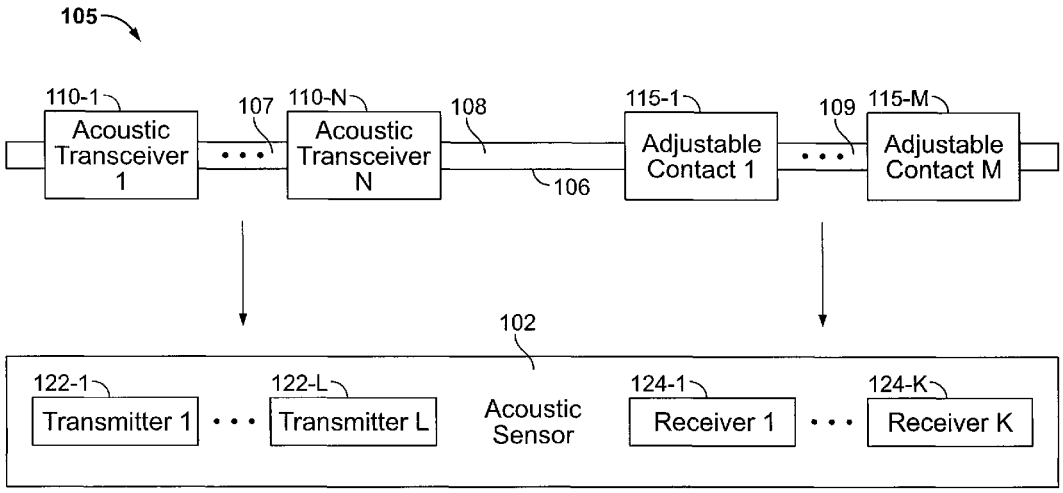
31 Claims, 7 Drawing Sheets