US009410664B2

(12) **United States Patent**
Krames et al.

(10) **Patent No.: US 9,410,664 B2**
(45) **Date of Patent: Aug. 9, 2016**

(54) **CIRCADIAN FRIENDLY LED LIGHT SOURCE**

(71) Applicant: **SORAA, INC.**, Fremont, CA (US)

(72) Inventors: **Michael R. Krames**, Mountain View, CA (US); **Aurelien J. F. David**, San Francisco, CA (US)

(73) Assignee: **Soraa, Inc.**, Fremont, CA (US)

(*) Notice: Subject to any disclaimer, the term of this patent is extended or adjusted under 35 U.S.C. 154(b) by 110 days.

(21) Appl. No.: **14/316,685**

(22) Filed: **Jun. 26, 2014**

(65) **Prior Publication Data**

US 2015/0062892 A1 Mar. 5, 2015

Related U.S. Application Data

(60) Provisional application No. 61/871,525, filed on Aug. 29, 2013.

(51) **Int. Cl.**

F21K 99/00	(2016.01)
F21Y 101/02	(2006.01)
F21Y 105/00	(2016.01)
F21Y 113/00	(2016.01)
F21V 23/00	(2015.01)
F21W 101/02	(2006.01)
H05B 33/08	(2006.01)
H05B 37/02	(2006.01)

(52) **U.S. Cl.**

CPC ... ***F21K 9/13*** (2013.01); ***F21S 4/20*** (2016.01); *F21V 23/003* (2013.01); *F21W 2101/02* (2013.01); *F21Y 2101/02* (2013.01); *F21Y 2105/001* (2013.01); *F21Y 2113/005* (2013.01); *H05B 33/086* (2013.01); *H05B 37/0281* (2013.01)

(58) **Field of Classification Search**

CPC F21K 9/13; F21Y 2105/001; F21Y 2113/005; F21Y 2101/02; F21S 4/003; F21W 2101/02; F21V 23/003

See application file for complete search history.

(56) **References Cited**

U.S. PATENT DOCUMENTS

4,873,696	A	10/1989	Coldren et al.
5,449,930	A	9/1995	Zhou
5,523,589	A	6/1996	Edmond et al.

(Continued)

FOREIGN PATENT DOCUMENTS

JP	03-142963	6/1991
JP	2004-179644	6/2004

(Continued)

OTHER PUBLICATIONS

Csuti et al., 'Color-matching experiments with RGB-LEDs', Color Research and Application, vol. 33, No. 2, 2008, pp. 1-9.

(Continued)

Primary Examiner — Anne Hines
(74) *Attorney, Agent, or Firm* — Saul Ewing LLP

(57) **ABSTRACT**

Methods and apparatus for providing circadian-friendly LED light sources are disclosed. A light source is formed to include a first LED emission (e.g., one or more LEDs emitting a first spectrum) and a second LED emission (e.g., one or more LEDs emitting a second spectrum) wherein the first and second LED emissions are combined in a first ratio and in a second ratio such that while changing from the first ratio to the second ratio the relative circadian stimulation is varied while maintaining a color rendering index above 80.
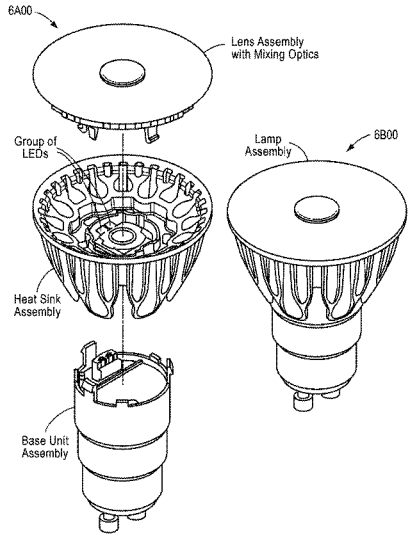
27 Claims, 56 Drawing Sheets