US009409564B2

(12) **United States Patent**
Shigyo

(10) **Patent No.: US 9,409,564 B2**
(45) **Date of Patent: Aug. 9, 2016**

(54) **CONTROL DEVICE**

(71) Applicant: **DENSO CORPORATION**, Kariya, Aichi-pref. (JP)

(72) Inventor: **Masakatsu Shigyo**, Handa (JP)

(73) Assignee: **DENSO CORPORATION**, Kariya (JP)

(*) Notice: Subject to any disclaimer, the term of this patent is extended or adjusted under 35 U.S.C. 154(b) by 0 days.

(21) Appl. No.: **14/721,397**

(22) Filed: **May 26, 2015**

(65) **Prior Publication Data**

US 2015/0336560 A1 Nov. 26, 2015

(30) **Foreign Application Priority Data**

May 26, 2014 (JP) 2014-107948

(51) **Int. Cl.**

B60L 11/00	(2006.01)
B60L 15/00	(2006.01)
B60W 20/00	(2016.01)
B60W 10/30	(2006.01)
B60W 10/26	(2006.01)
B60K 6/46	(2007.10)

(52) **U.S. Cl.**

CPC ***B60W 20/10*** (2013.01); ***B60K 6/46*** (2013.01); ***B60W 10/26*** (2013.01); ***B60W 10/30*** (2013.01); ***B60W 20/00*** (2013.01); *B60W 2550/402* (2013.01); *B60W 2710/244* (2013.01); *B60W 2710/30* (2013.01); *Y10S 903/93* (2013.01)

(58) **Field of Classification Search**

CPC B60W 20/10; B60W 20/00; B60W 10/30; B60W 10/26; B60W 2710/30; B60W 2710/244; B60W 2550/402; B60K 6/46; Y10S 903/93

See application file for complete search history.

(56) **References Cited**

U.S. PATENT DOCUMENTS

2002/0084769	A1	7/2002	Iritani et al.	
2009/0101421	A1	4/2009	Oyobe et al.	
2009/0114463	A1*	5/2009	DeVault	B60K 6/365 180/65.29
2010/0324765	A1*	12/2010	Iida	H01M 10/486 701/22
2011/0202418	A1*	8/2011	Kempton	B60L 11/1824 705/26.1
2012/0222438	A1*	9/2012	Osaka	B60H 1/00271 62/126
2013/0020398	A1*	1/2013	Goto	B60H 1/00285 237/12.4
2013/0211649	A1*	8/2013	Tashiro	B60H 1/00735 701/22
2014/0012445	A1*	1/2014	Fleckenstein	H01M 10/486 701/22
2014/0081481	A1*	3/2014	Nishida	B60H 1/00771 701/2
2014/0144998	A1*	5/2014	Ichishi	B60H 1/00314 237/12.3 A
2014/0277869	A1*	9/2014	King	B60H 1/00278 701/22

FOREIGN PATENT DOCUMENTS

JP	2004-56867	2/2004

* cited by examiner

Primary Examiner — Mary Cheung
(74) *Attorney, Agent, or Firm* — Nixon & Vanderhye PC

(57) **ABSTRACT**

A vehicle is equipped with an engine, a motor generator, an electricity storing part, and an air-conditioning part. A control device for the vehicle includes: a determining portion that determines whether the vehicle approaches a destination; an estimating portion that estimates a cooling demand or a heating demand for a next trip of the vehicle; and a changing portion that changes a target value of a charge state of the electricity storing part from a normal value to a different value when the determining portion determines that the vehicle approaches the destination and when the estimating portion estimates that there is the cooling demand or the heating demand.
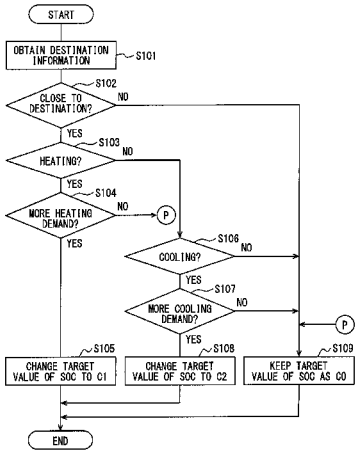
8 Claims, 5 Drawing Sheets