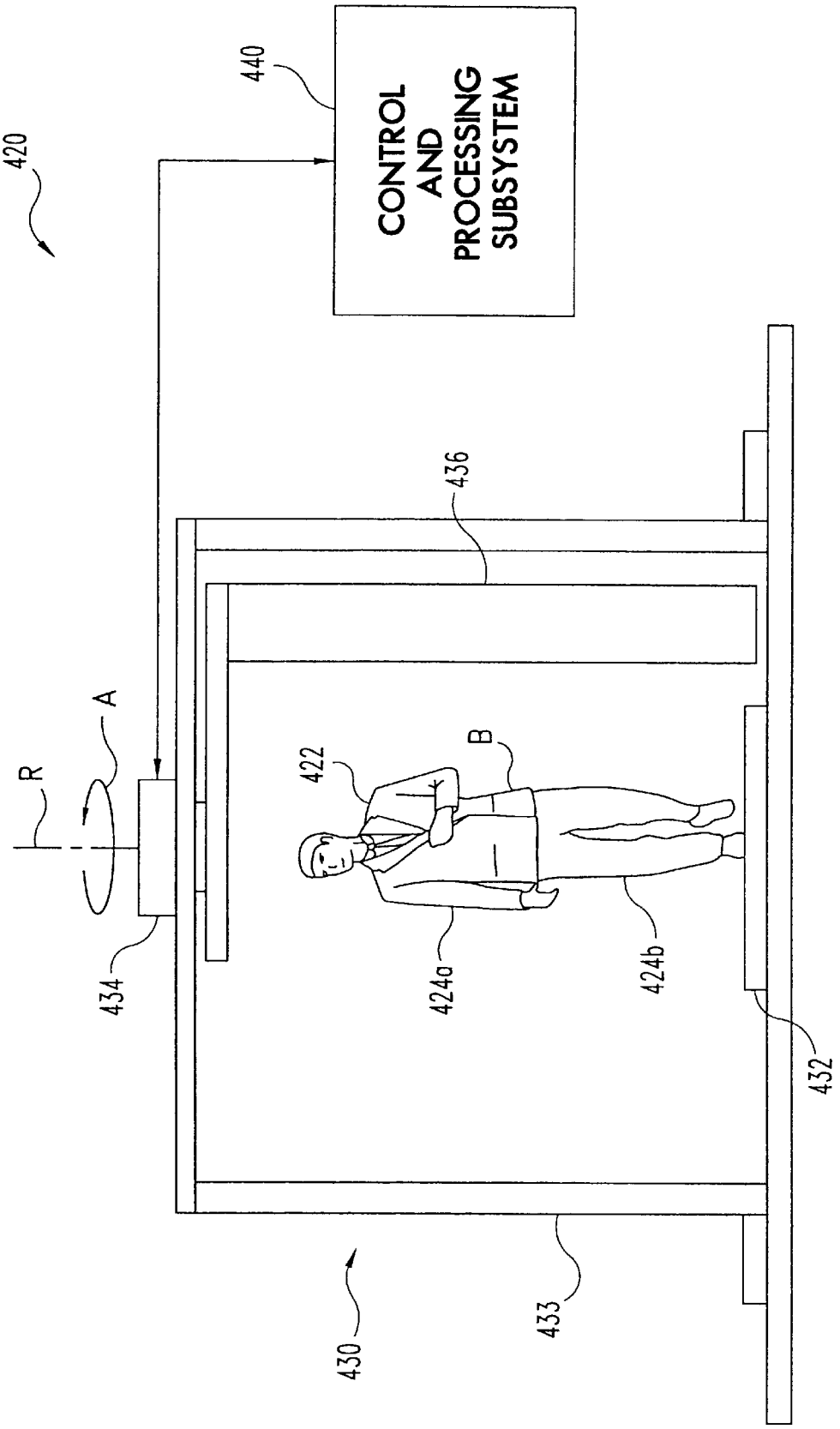
420
440
CONTROL AND PROCESSING SUBSYSTEM
436
R
A
422
B
434
424a
424b
432
430
433

Fig. 7