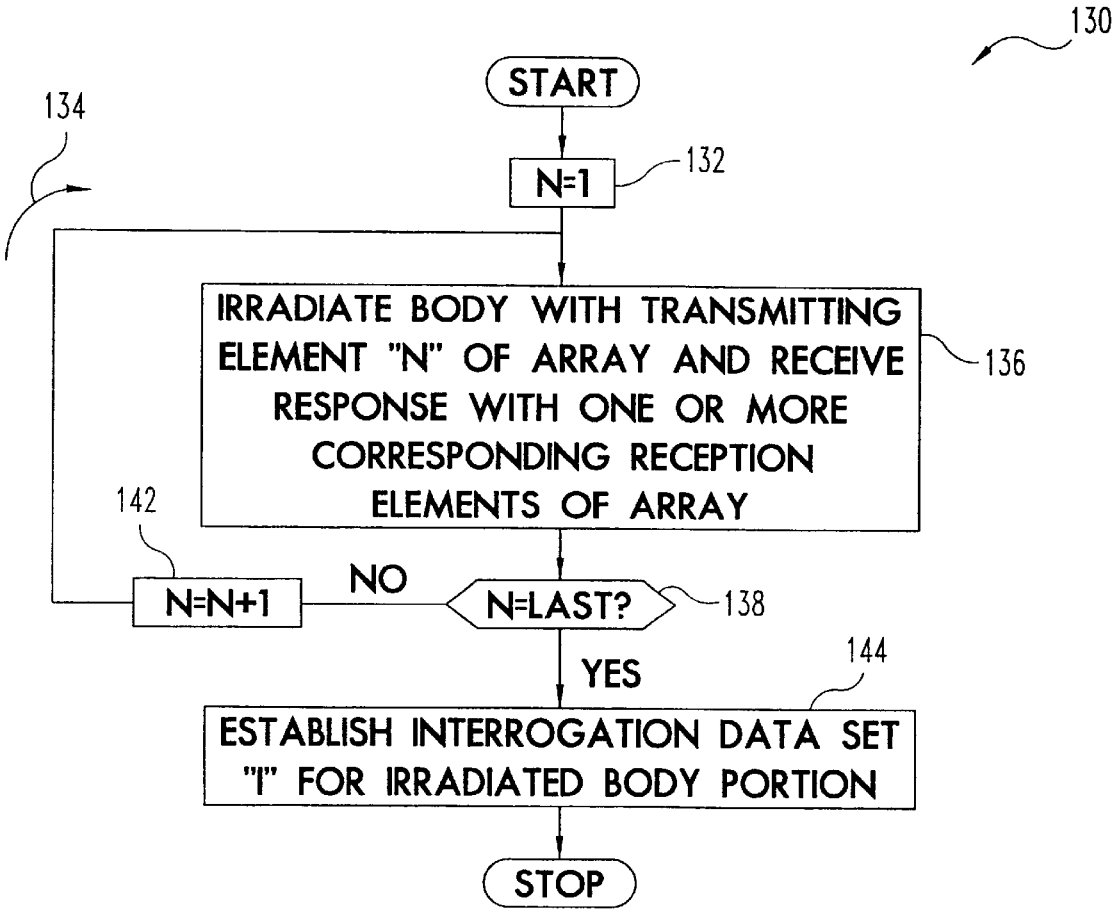
130
START
134
N=1
132
IRRADIATE BODY WITH TRANSMITTING ELEMENT "N" OF ARRAY AND RECEIVE RESPONSE WITH ONE OR MORE CORRESPONDING RECEPTION ELEMENTS OF ARRAY
136
142
N=N+1
NO
N=LAST?
138
YES
144
ESTABLISH INTERROGATION DATA SET "I" FOR IRRADIATED BODY PORTION
STOP

Fig. 4