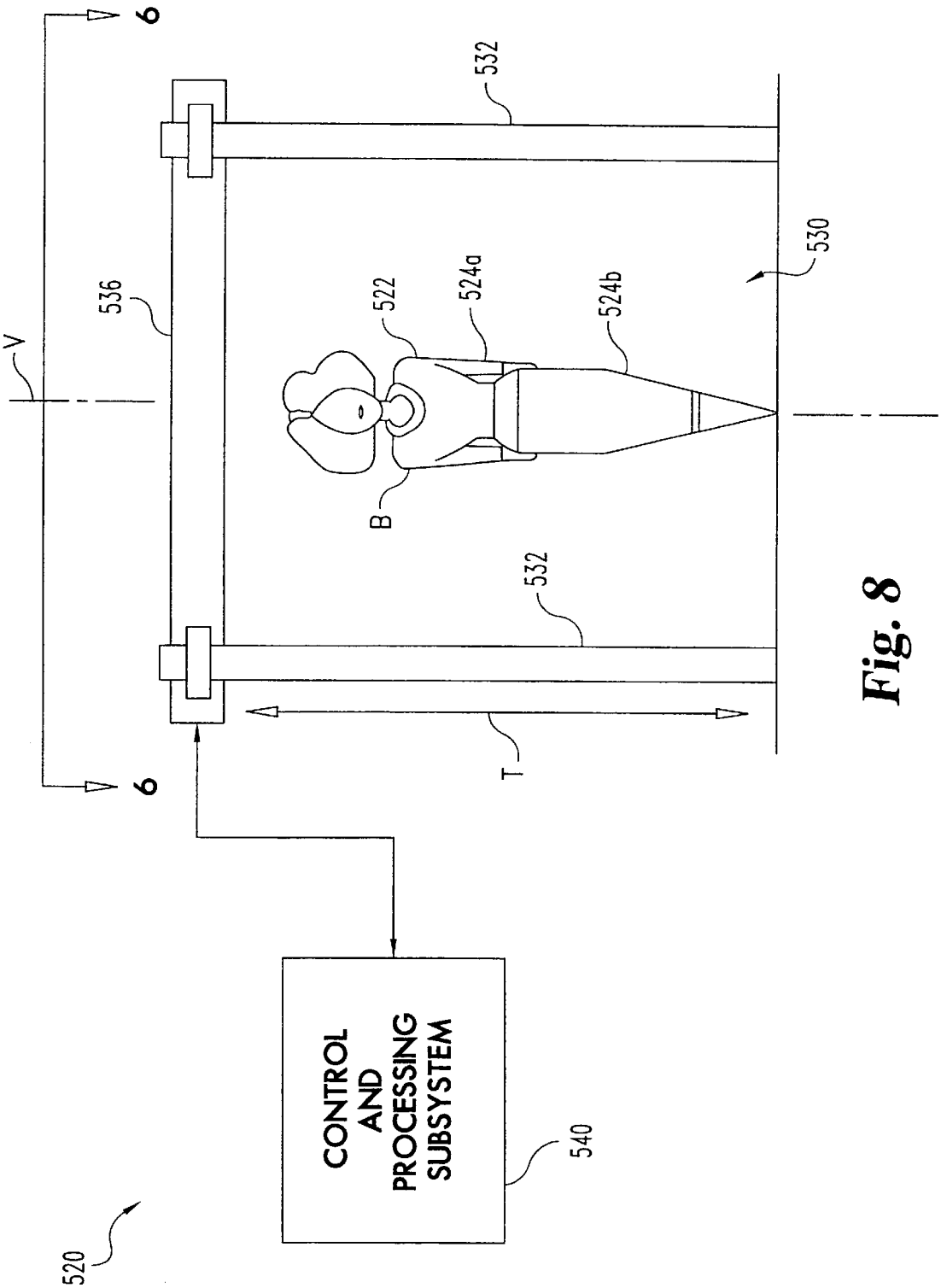
6
6
V
536
532
532
522
524a
524b
530
B
T
CONTROL AND PROCESSING SUBSYSTEM
540
520

Fig. 8