United States Patent [19]

Lindberg

[11] **4,286,263**

[45] **Aug. 25, 1981**

[54] **ILLUMINATED CHANGEABLE-DISPLAY SIGN**

[76] Inventor: **Allan W. Lindberg,** 464 N. Taylor Ave., St. Louis, Mo. 63122

[21] Appl. No.: **67,174**

[22] Filed: **Aug. 16, 1979**

[51] **Int. Cl.**[3] **G08B 5/36**

[52] **U.S. Cl.** ..... **340/717;** 73/359 R; 73/362 R; 340/718; 340/760; 368/64

[58] **Field of Search** ..... 340/717, 780, 792, 693, 340/636, 718, 782, 789; 368/64; 73/359 R, 362 R

[56] **References Cited**

U.S. PATENT DOCUMENTS

2,907,995	10/1959	Justus	340/780 X
3,320,585	5/1967	Hines	340/717 X
3,320,586	5/1967	Wagner	340/717 X
3,384,888	5/1968	Harnden et al.	340/792
3,389,389	6/1968	Minear	340/792 X
3,727,185	4/1973	Jones et al.	340/792 X
4,017,724	4/1977	Finger	340/636 X
4,138,670	2/1979	Schneider et al.	340/636 X

Primary Examiner—David L. Trafton

Attorney, Agent, or Firm—Rogers, Eilers & Howell

[57] **ABSTRACT**

An illuminated changeable-display sign has lamps which are visible to viewers and which are arranged in rows and columns, has light emitting diodes which are visible to the operator of that sign and which are arranged in corresponding rows and columns, and has control circuitry which enables the data displayed by the LEDS to be exactly the same as or different from the data displayed by the lamps.
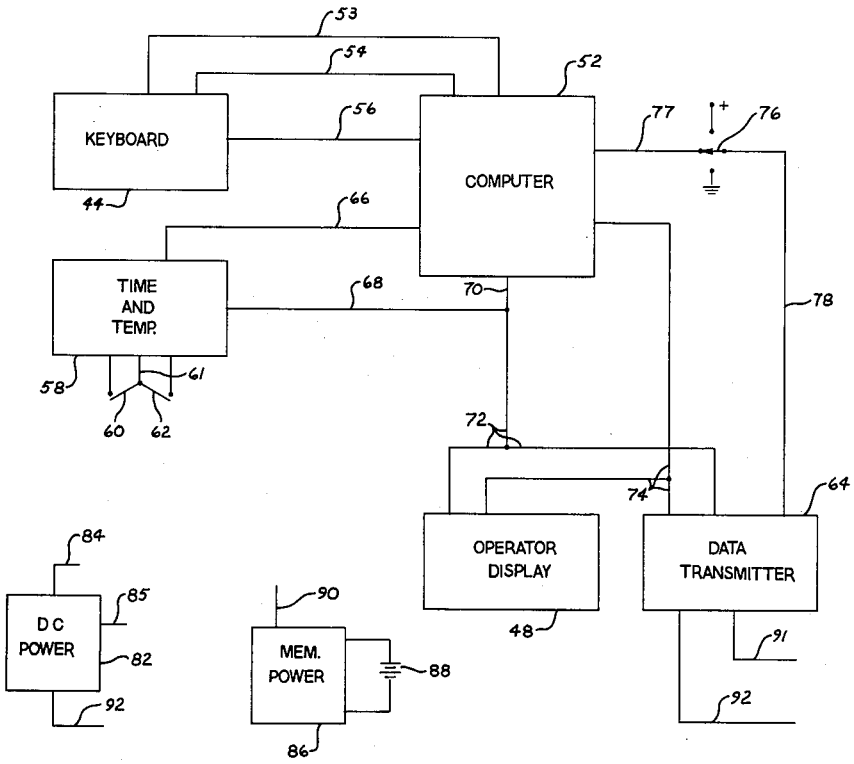
13 Claims, 23 Drawing Figures