HEAT EXCHANGER

Filed Jan. 22, 1962 3 Sheets-Sheet 1

Fig. 1

PRIOR ART

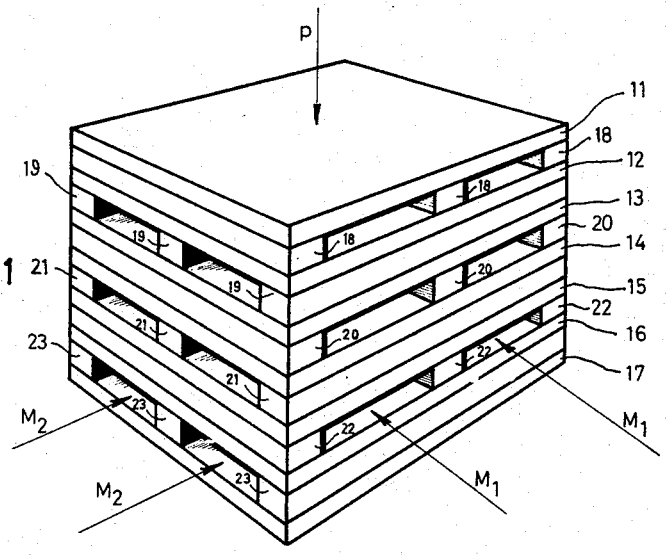

Fig. 2

PRIOR ART

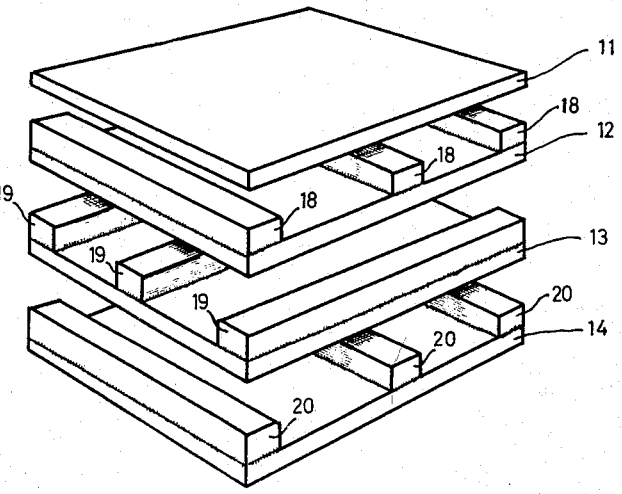

FRANKLIN FRÖHLICH
INVENTOR.

BY

Lawrence C. Kubecher
ATTORNEY.