US008373663B2

(12) **United States Patent**
Skillman et al.

(10) **Patent No.: US 8,373,663 B2**
(45) **Date of Patent: *Feb. 12, 2013**

(54) **SMALL FORM-FACTOR KEYPAD FOR MOBILE COMPUTING DEVICES**

(75) Inventors: **Peter Skillman**, San Carlos, CA (US); **Richard Gloscia**, Santa Clara, CA (US); **Michael Yurochko**, Los Gatos, CA (US); **Arthur Zarnowitz**, San Jose, CA (US)

(73) Assignee: **Hewlett-Packard Development Company, L.P.**, Houston, TX (US)

(*) Notice: Subject to any disclaimer, the term of this patent is extended or adjusted under 35 U.S.C. 154(b) by 737 days.

This patent is subject to a terminal disclaimer.

(21) Appl. No.: **12/405,190**

(22) Filed: **Mar. 16, 2009**

(65) **Prior Publication Data**

US 2009/0179861 A1 Jul. 16, 2009

Related U.S. Application Data

(63) Continuation of application No. 11/115,032, filed on Apr. 25, 2005, now Pat. No. 7,525,534, which is a continuation-in-part of application No. 11/080,375, filed on Mar. 14, 2005.

(51) **Int. Cl.**
G06F 3/02 (2006.01)
G09G 5/00 (2006.01)

(52) **U.S. Cl.** **345/168**; 345/169; 345/170; 345/171; 345/172; 345/606; 345/609; 345/629

(58) **Field of Classification Search** ..... 345/146, 345/156–174, 422, 530, 539, 541, 582, 606, 345/609, 629; 200/344, 517, 314, 5 A; 400/82, 400/489, 490; 455/550, 566; 361/680, 681, 361/683

See application file for complete search history.

(56) **References Cited**

U.S. PATENT DOCUMENTS

1,718,694	A	6/1929	Kurowski	
3,369,643	A *	2/1968	Avgerinos et al.	400/478
3,396,827	A	8/1968	Harwell	
3,744,034	A	7/1973	Paul	
3,937,952	A	2/1976	Ripley et al.	
4,022,993	A	5/1977	Shattuck	
4,060,703	A	11/1977	Everett	
4,180,336	A	12/1979	Lonsdale	
4,320,268	A	3/1982	Brown	
4,359,612	A	11/1982	Rooney	
4,359,613	A	11/1982	Rooney	
4,559,705	A	12/1985	Hodge et al.	
4,564,751	A	1/1986	Alley et al.	
RE32,419	E	5/1987	Rooney	
4,679,951	A	7/1987	King et al.	
4,762,227	A	8/1988	Patterson	
4,802,210	A	1/1989	Spencer et al.	

(Continued)

FOREIGN PATENT DOCUMENTS

DE	10203400	6/2003
EP	0760291 A2	3/1997

(Continued)

OTHER PUBLICATIONS

Final Office Action dated Dec. 28, 2007 in U.S. Appl. No. 11/080,375, 11 pgs.

(Continued)

Primary Examiner — Prabodh M Dharia

(57) **ABSTRACT**

Embodiments of the invention provide an effective keypad assembly and keypad layout for mobile computing devices. In particular, embodiments of the invention provide keyboard layouts and designs. Additionally, embodiments described herein provide for stack components to make keyboards operable on small-form factor devices.
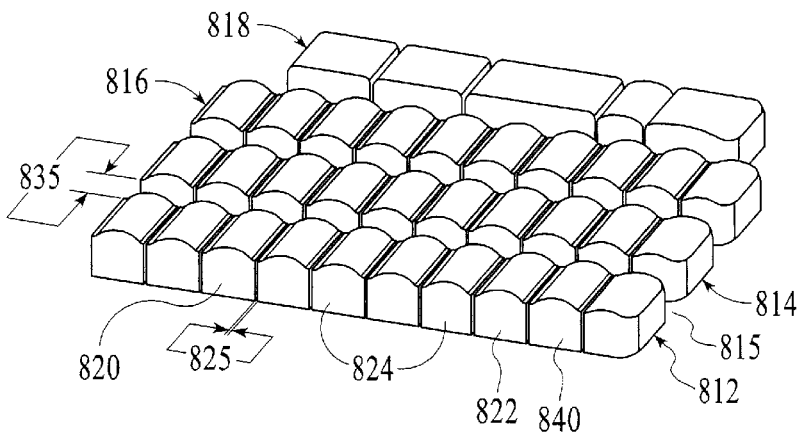
19 Claims, 26 Drawing Sheets