May 24, 1949. D. B. VINCENT 2,471,363

PROCESS OF MAKING FOOD PRODUCTS

Filed Nov. 27, 1945 2 Sheets-Sheet 1

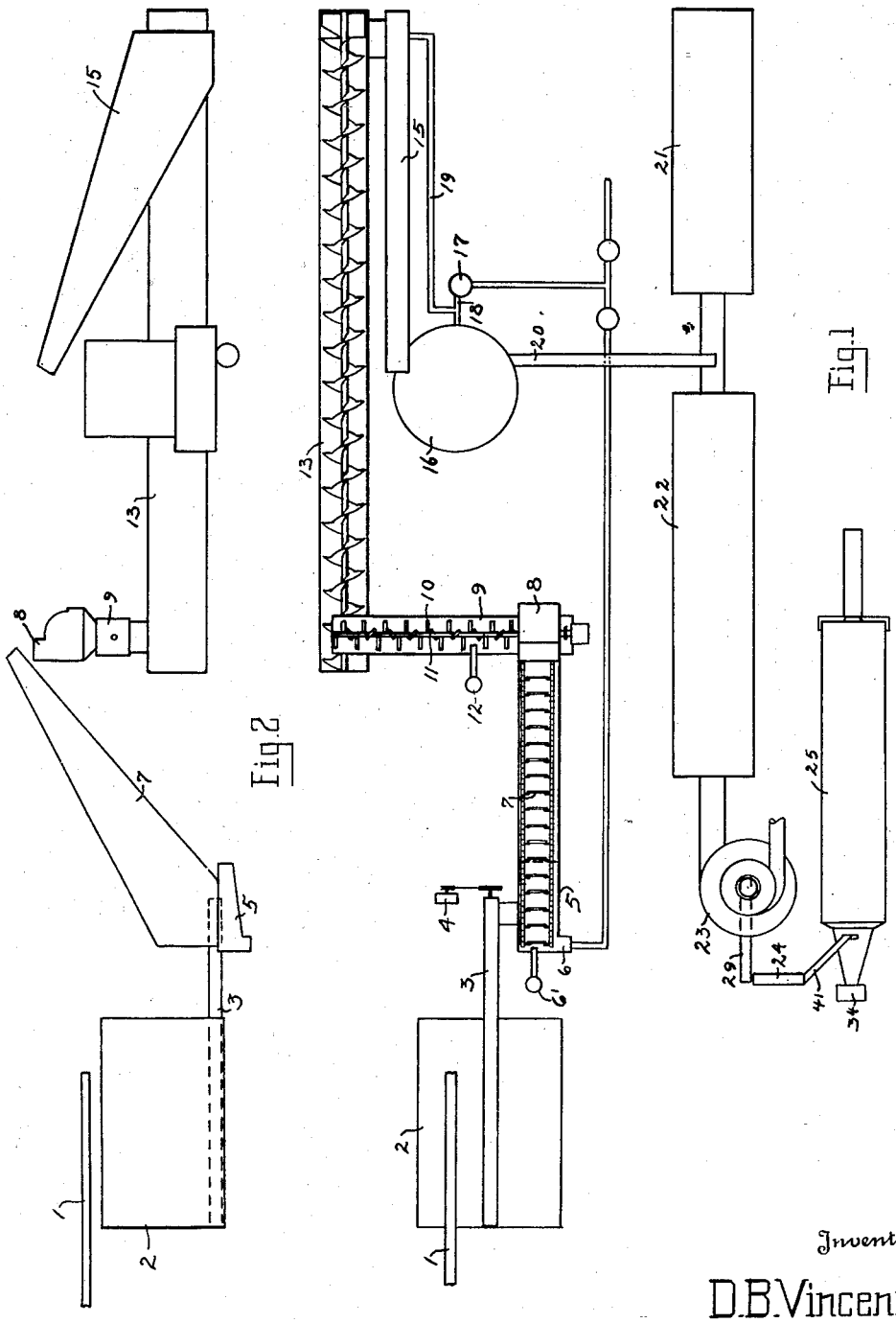

Fig. 1

Fig. 2

Inventor

D.B.Vincent

By Arthur Winnick

Attorney