US009065163B1

(12) **United States Patent**
Wu et al.

(10) **Patent No.: US 9,065,163 B1**
(45) **Date of Patent: Jun. 23, 2015**

(54) **HIGH FREQUENCY POWER COMBINER/DIVIDER**

(71) Applicant: **Nuvotronics, LLC**, Radford, VA (US)

(72) Inventors: **Donald X. Wu**, Diamond Bar, CA (US); **David W. Sherrer**, Radford, VA (US); **Jean-Marc Rollin**, Blacksburg, VA (US)

(73) Assignee: **NUVOTRONICS, LLC**, Radford, VA (US)

(*) Notice: Subject to any disclaimer, the term of this patent is extended or adjusted under 35 U.S.C. 154(b) by 254 days.

(21) Appl. No.: **13/726,073**

(22) Filed: **Dec. 22, 2012**

Related U.S. Application Data

(60) Provisional application No. 61/580,100, filed on Dec. 23, 2011.

(51) **Int. Cl.**

H01P 5/12	(2006.01)
H01P 3/12	(2006.01)
H01P 11/00	(2006.01)
H03F 3/195	(2006.01)
H03F 3/21	(2006.01)

(52) **U.S. Cl.**
CPC ***H01P 3/12*** (2013.01); ***H01P 11/002*** (2013.01); ***H03F 3/195*** (2013.01); ***H03F 3/211*** (2013.01)

(58) **Field of Classification Search**
CPC H01P 5/12; H01P 5/082; H01P 5/103; H01P 5/107
USPC 333/125–129, 135, 137
See application file for complete search history.

(56) **References Cited**

U.S. PATENT DOCUMENTS

2,502,479	A		4/1950	Pearson et al.
4,590,446	A		5/1986	Hsu et al.
4,812,782	A		3/1989	Ajioka
4,933,651	A	*	6/1990	Benahim et al. 333/125
5,079,527	A		1/1992	Goldfarb
5,117,377	A		5/1992	Finman
5,126,704	A		6/1992	Dittmer et al.
5,222,246	A		6/1993	Wolkstein
5,287,069	A		2/1994	Okubo
5,736,898	A		4/1998	Kohl et al.
5,872,491	A		2/1999	Kim et al.
5,880,648	A		3/1999	Aves et al.
5,884,143	A		3/1999	Wolkstein et al.
5,953,811	A		9/1999	Mazzochette
6,046,609	A		4/2000	Toyoshima et al.

(Continued)

FOREIGN PATENT DOCUMENTS

WO 2012003506 1/2012

OTHER PUBLICATIONS

Chance, G.I. et al., "A suspended-membrane balanced frequency doubler at 200GHz," 29th International Conference on Infrared and Millimeter Waves and Terahertz Electronics, pp. 321-322, Karlsrube, 2004.

(Continued)

Primary Examiner — Robert Pascal
Assistant Examiner — Kimberly Glenn
(74) *Attorney, Agent, or Firm* — Niels Haun; Dann Dorfman Herrell & Skillman, PC

(57) **ABSTRACT**

Radio frequency (RF) power amplifiers are provided which may include high power, wideband, microwave or millimeter-wave solid state power amplifiers based on waveguide power combiner/dividers.
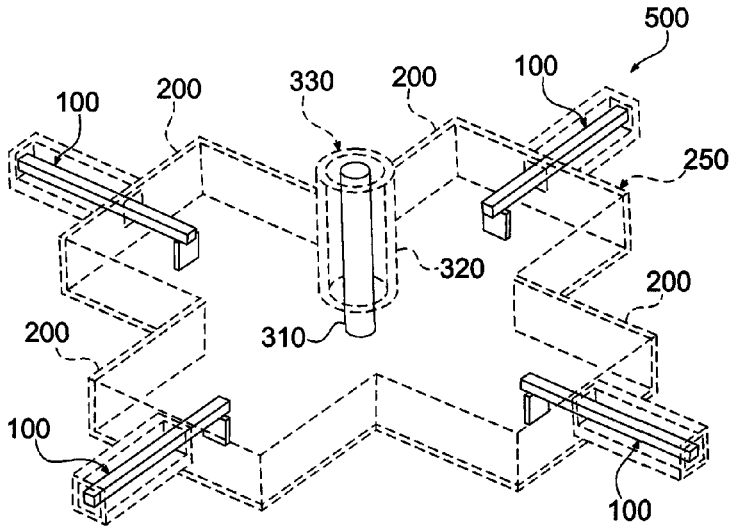
17 Claims, 21 Drawing Sheets