United States Patent [19]

Bissonette et al.

[11] **Patent Number: 4,759,763**

[45] **Date of Patent: Jul. 26, 1988**

[54] **FOLDABLE INTRAOCULAR LENS**

[75] Inventors: **Noel G. Bissonette**, Richfield; **Thomas M. Heyman**, Prior Lake; **Harold H. Hogan**, Brooklyn Park, all of Minn.

[73] Assignee: **Precision-Cosmet Co., Inc.**, Minneapolis, Minn.

[21] Appl. No.: **926,919**

[22] Filed: **Nov. 3, 1986**

[51] **Int. Cl.**[4] **A61F 2/16**

[52] **U.S. Cl.** **623/6**

[58] **Field of Search** 623/6

[56] **References Cited**

U.S. PATENT DOCUMENTS

3,034,403	5/1962	Neefe	623/6 X
3,270,099	8/1966	Camp .	
3,794,414	2/1974	Wesley	351/161
4,010,496	3/1977	Neefe	623/6
4,244,060	1/1981	Hoffer	623/6
4,343,050	8/1982	Kelman	623/6
4,373,218	2/1983	Schachar	623/6
4,435,856	3/1984	L'Esparance	623/6
4,450,593	5/1984	Poler	623/6
4,451,938	6/1984	Kelman	623/6
4,504,982	3/1985	Burk	623/6
4,512,040	4/1985	McClure	623/6
4,525,043	6/1985	Bronstein	351/160 R
4,573,998	3/1986	Mazzocco	623/6
4,605,409	8/1986	Kelman	623/6
4,619,657	10/1986	Keates et al.	623/6
4,634,442	1/1987	Link	623/6
4,636,211	1/1987	Nielsen et al.	623/6
4,657,546	4/1987	Shearing	623/6
4,664,665	5/1987	Reuss et al.	623/6

FOREIGN PATENT DOCUMENTS

0099641	2/1984	European Pat. Off.	623/6
0174917	3/1986	European Pat. Off. .	

OTHER PUBLICATIONS

Business Week, Feb. 10, 1986, "Bifocal Contact Lenses Without a Pain in the Neck", p. 93.

Opthalmology Times, May 1, 1986, vol. II, No. 9, "Bifocal IOL Design Offers Equal Vision", James McHenry Nielsen, M.D.

Primary Examiner—Ronald L. Frinks

Attorney, Agent, or Firm—Merchant, Gould, Smith, Edell, Welter & Schmidt

[57] **ABSTRACT**

An intraocular lens (**20**) for use as an artificial lens implant is disclosed. The intraocular lens includes a lens body (**21**) having first and second relatively rigid members (**24**) and (**30**). Hinges (**40**) and (**45**) provide means for resiliently cooperatively connecting the first section (**24**) to the second section (**30**). The first section (**24**) is foldable with respect to the second section (**30**), wherein the lens body (**21**) may be folded from an operational configuration to a smaller insertion configuration making implantation possible through a smaller cut in the cornea of the eye than would otherwise be possible and after insertion and upon release of the hinges (**40**) and (**45**) the lens body (**21**) returns to the operational configuration without further manipulation. Three embodiments of the intraocular lens (**20**), (**50**) and (**80**) are disclosed.
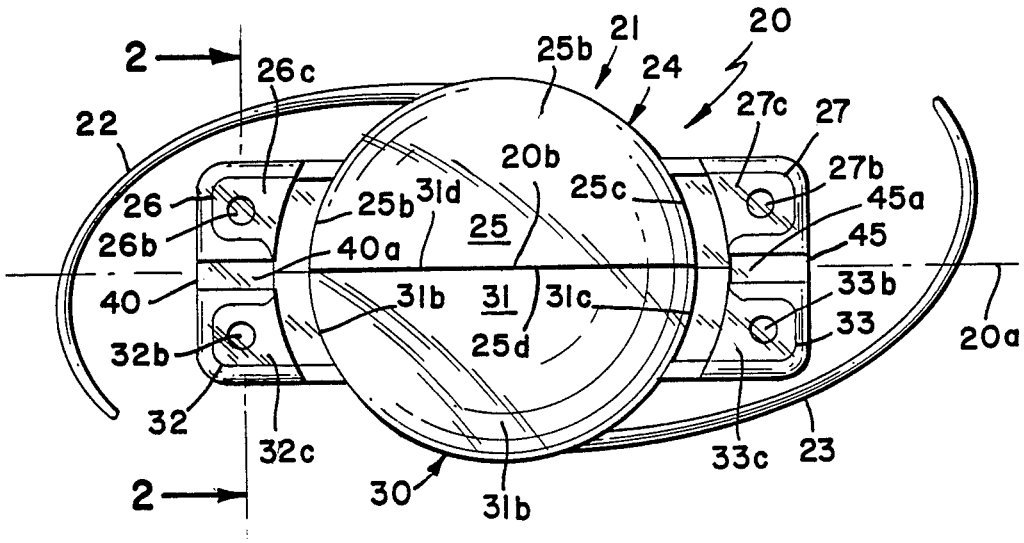
14 Claims, 3 Drawing Sheets