Aug. 30, 1960 M. R. SHAFFER ET AL 2,951,163

VERSATILE SOLAR POWERED RADIO RECEIVER OR THE LIKE

Filed Aug. 3. 1956

FIG. 1

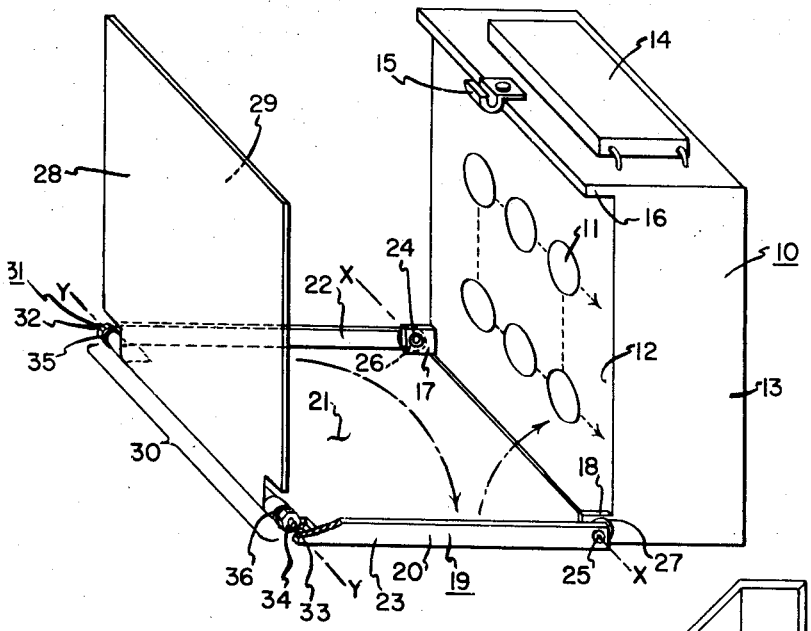

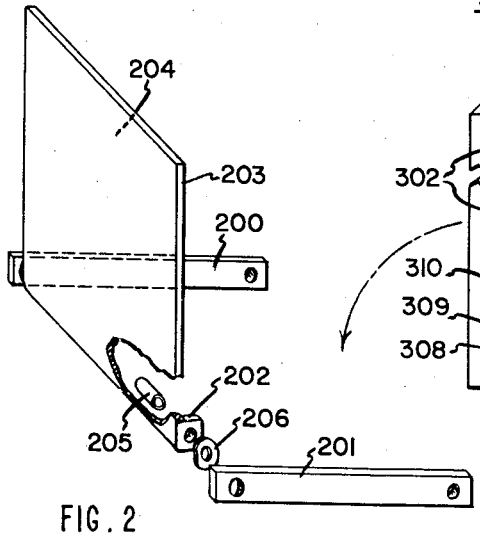

FIG. 2

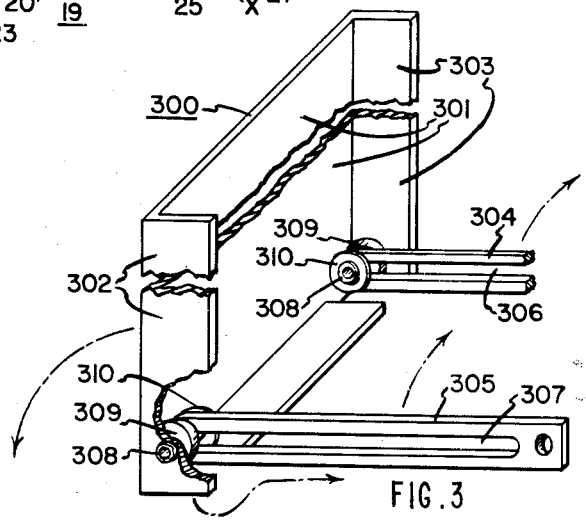

FIG. 3

MARLIN R. SHAFFER
ROBERT L. WEISBRICH
INVENTORS

BY

THEIR ATTORNEY