US007645063B2

(12) **United States Patent**
Lee et al.

(10) **Patent No.: US 7,645,063 B2**
(45) **Date of Patent: Jan. 12, 2010**

(54) **BACKLIGHT UNIT**

(75) Inventors: **Seok Woo Lee**, Seoul (KR); **Do Yune Kim**, Kumi-shi (KR)

(73) Assignee: **LG Display Co., Ltd.**, Seoul (KR)

(*) Notice: Subject to any disclaimer, the term of this patent is extended or adjusted under 35 U.S.C. 154(b) by 0 days.

(21) Appl. No.: **11/143,656**

(22) Filed: **Jun. 3, 2005**

(65) **Prior Publication Data**

US 2006/0002152 A1 Jan. 5, 2006

(30) **Foreign Application Priority Data**

Jun. 30, 2004 (KR) 10-2004-0050328

(51) **Int. Cl.**
F21V 8/00 (2006.01)

(52) **U.S. Cl.** **362/561**; 362/560; 362/609

(58) **Field of Classification Search** 362/561, 362/608, 609, 610, 621, 628, 560, 551, 559, 362/511, 330, 606, 603, 607, 616; 349/63, 349/65, 67

See application file for complete search history.

(56) **References Cited**

U.S. PATENT DOCUMENTS

5,617,251	A *	4/1997	Ohta et al.	359/599
5,980,046	A *	11/1999	Park	353/122
6,034,750	A	3/2000	Rai et al.	
6,239,851	B1	5/2001	Hatazawa et al.	
6,283,602	B1	9/2001	Kawaguchi et al.	
6,648,485	B1 *	11/2003	Colgan et al.	362/600
6,655,810	B2 *	12/2003	Hayashi et al.	362/600
6,761,475	B2 *	7/2004	Perlo et al.	362/511
7,021,813	B2 *	4/2006	Lee et al.	362/609
2004/0114343	A1 *	6/2004	Ho	362/31

FOREIGN PATENT DOCUMENTS

CN	2619291	Y	6/2004
JP	6-138458	A	5/1994
JP	6-174929	A	6/1994
JP	9-211232	A	8/1997
JP	11-273436	A	10/1999
JP	2000-260216	A	9/2000
JP	2002-319308	A	10/2002
JP	2002-352615	A	12/2002
JP	2003-168310	A	6/2003

(Continued)

OTHER PUBLICATIONS

Communication from German Patent Office dated Aug. 30, 2006.

Primary Examiner—Sharon E Payne
(74) *Attorney, Agent, or Firm*—McKenna Long & Aldridge LLP

(57) **ABSTRACT**

A backlight unit, in which an incident surface of a light-guiding plate is formed in a shape of a curve, or a curve-shaped structure is formed in a housing to improve the light efficiency. The backlight unit includes a light source emitting light; a housing surrounding the light source; a light-guiding plate guiding the light emitted from the light source to an LCD panel, wherein the light-guiding plate has an incident surface formed in a shape of a curve; and a reflective sheet formed under the light-guiding plate.
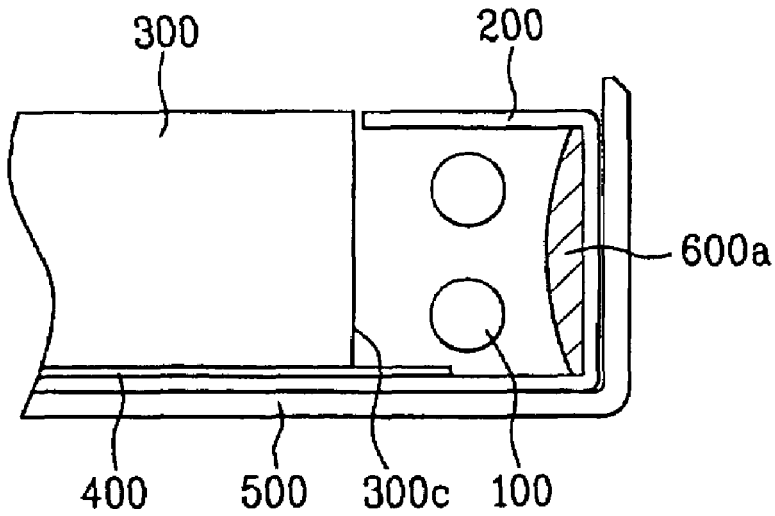
7 Claims, 4 Drawing Sheets