United States Patent [19]

Ryan

[11] **4,034,463**

[45] **July 12, 1977**

[54] **METHOD OF VERTICAL DISPLAY OF WALL PANELING**

[76] Inventor: **Robert E. Ryan,** 608 Mountain Road, Smoke Rise, Kinnelon, N.J. 07405

[21] Appl. No.: **686,055**

[22] Filed: **May 13, 1976**

[51] **Int. Cl.**[2] **B23P 11/02**

[52] **U.S. Cl.** ..... **29/446;** 29/463; 29/469; 29/526; 40/125 H; 52/239; 160/135

[58] **Field of Search** ..... 29/446, 463, 469, 526; 52/239; 40/125 H, 125 E, 125 R, 152.1; 160/135

[56] **References Cited**

U.S. PATENT DOCUMENTS

2,587,698	3/1952	Corn et al.	40/125 R UX
3,171,223	3/1965	Josephson	40/152.1 X
3,352,523	11/1967	Vanderays	40/125 R X
3,428,108	2/1969	Singer	160/135
3,463,218	8/1969	Cannon et al.	40/125 R X
3,565,152	2/1971	Cohn, Jr.	40/125 H X
3,889,736	6/1975	Firks	160/135
3,927,481	12/1975	Safranek	160/135 X
3,952,437	4/1976	Mitchell	40/152.1

Primary Examiner—Charlie T. Moon
Attorney, Agent, or Firm—Silverman and Jackson

[57] **ABSTRACT**

The present method for display of wall paneling includes the steps of securing two back-to-back panel samples within a perimeter and then in turn securing several of such perimeters within variously configured pre-formed angle channels in order to obtain a desired floor display pattern.

2 Claims, 7 Drawing Figures

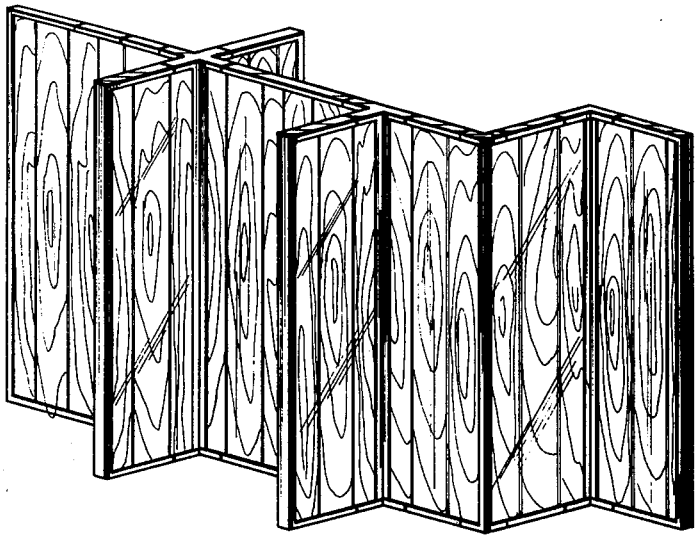
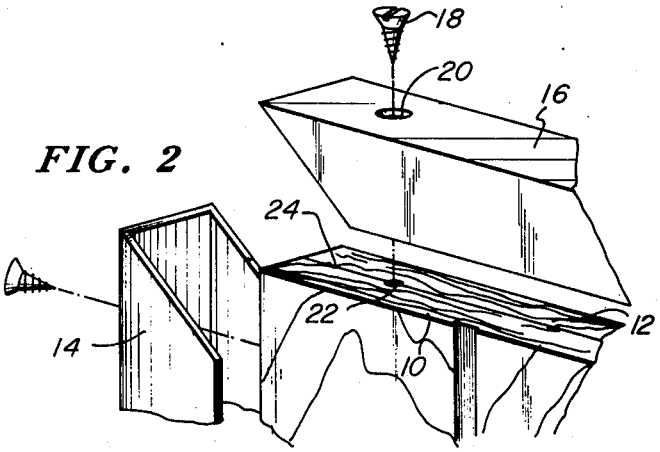
FIG. 2