United States Patent [19]

Smith et al.

[11] **Patent Number: 4,934,363**

[45] **Date of Patent: Jun. 19, 1990**

[54] **LENS INSERTION INSTRUMENT**

[75] Inventors: **Gregory M. Smith**, Rowland Heights; **Ernest Aguilera**, Diamond Bar; **Howard Newman**, Los Angeles, all of Calif.

[73] Assignee: **Iolab Corporation**, Claremont, Calif.

[21] Appl. No.: **132,292**

[22] Filed: **Dec. 15, 1987**

[51] **Int. Cl.**[5] **A61F 2/16**

[52] **U.S. Cl.** **606/107**; 623/6

[58] **Field of Search** ..... 128/303 R, 321, 354, 128/1 R; 604/57, 59, 60, 104, 106, 107, 164, 170; 623/6

[56] **References Cited**

U.S. PATENT DOCUMENTS

4,198,980	4/1980	Clark	128/303 R
4,325,375	4/1982	Nevyas	128/321
4,573,998	3/1986	Mazzocco	623/6
4,600,003	7/1986	Lopez	128/303 R
4,607,617	8/1986	Choyce	128/305
4,642,090	2/1987	Utrata	128/305
4,674,500	6/1987	De Satnick	128/305
4,681,102	7/1987	Bartell	623/6
4,711,638	12/1987	Lindstrom	128/303 R
4,715,373	12/1987	Mazzocco et al.	128/321
4,750,498	6/1988	Graham	128/303 R
4,759,359	7/1988	Willis et al.	128/303 R
4,763,650	8/1988	Hauser	128/303 R
4,765,329	8/1988	Cumming et al.	128/303 R
4,781,719	11/1988	Kelman	128/303 R
4,787,904	11/1988	Severin et al.	128/303 R

Primary Examiner—Stephen C. Pellegrino
Assistant Examiner—Ralph Lewis
Attorney, Agent, or Firm—Donal B. Tobin

[57] **ABSTRACT**

An insertion tool for an intraocular lens including a disposable insertion assembly and a reusable handle. The insertion assembly includes a rigid tube with a collar about its proximal end and a lens holder which slides within the rigid tube and also includes a collar on its proximal end and a paddle on its distal end. The handle includes a hollow barrel connected to the rigid tube collar and a driver barrel inside the barrel connected to the collar of the lens holder. An actuator button slides along the outside of the barrel and extends through a slot in the side of the barrel to engage the drive barrel. A pusher rod may be placed inside the bore of the drive barrel to help hold the lens in position.
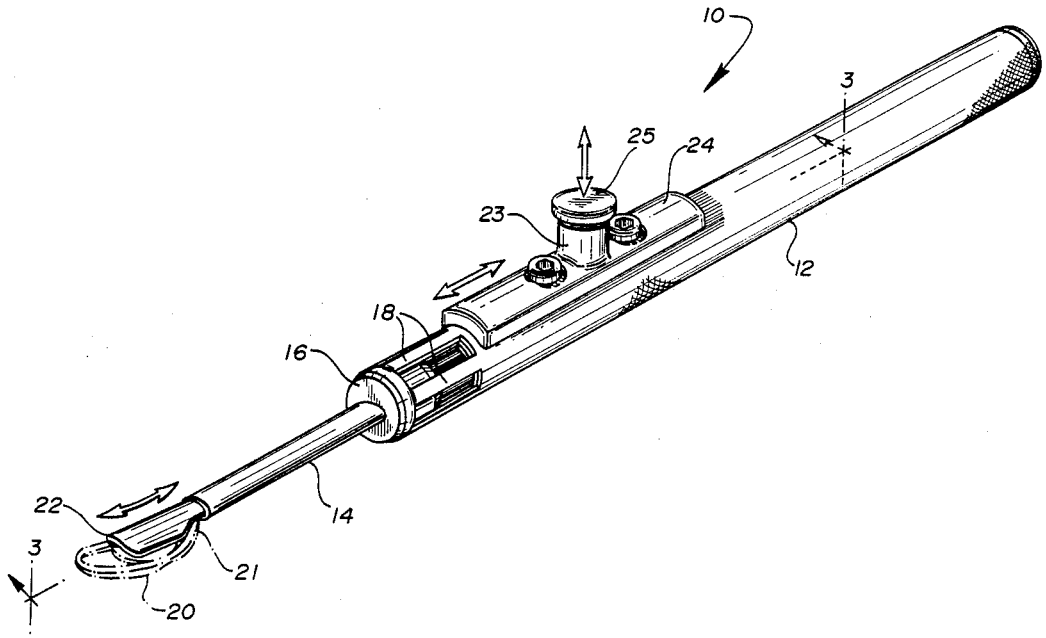
21 Claims, 5 Drawing Sheets