US009918763B2

(12) **United States Patent**
**Hynes et al.**

(10) **Patent No.: US 9,918,763 B2**
(45) **Date of Patent: Mar. 20, 2018**

(54) **BONE FIXATION ELEMENT AND METHODS OF USE**

(71) Applicant: **Warsaw Orthopedic, Inc.**, Warsaw, IN (US)

(72) Inventors: **Richard A. Hynes**, Melbourne Beach, FL (US); **Gregory C. Marik**, Collierville, TN (US); **Trevor Seck**, Memphis, TN (US)

(73) Assignee: **Warsaw Orthopedic, Inc.**, Warsaw, IN (US)

( * ) Notice: Subject to any disclaimer, the term of this patent is extended or adjusted under 35 U.S.C. 154(b) by 270 days.

(21) Appl. No.: **14/808,077**

(22) Filed: **Jul. 24, 2015**

(65) **Prior Publication Data**

US 2017/0020572 A1 Jan. 26, 2017

(51) **Int. Cl.**
***A61B 17/70*** (2006.01)
***A61B 17/86*** (2006.01)
***A61B 17/80*** (2006.01)

(52) **U.S. Cl.**
CPC ..... ***A61B 17/8605*** (2013.01); ***A61B 17/7032*** (2013.01); ***A61B 17/7035*** (2013.01); ***A61B 17/7044*** (2013.01); ***A61B 17/809*** (2013.01)

(58) **Field of Classification Search**
CPC ..... A61B 17/7044; A61B 17/7032; A61B 17/864; A61B 17/869
See application file for complete search history.

(56) **References Cited**

U.S. PATENT DOCUMENTS

5,133,717 A * 7/1992 Chopin ..... A61B 17/7055 606/264
5,147,360 A * 9/1992 Dubousset ..... A61B 17/705 606/250
8,052,726 B2 * 11/2011 Nayet ..... A61B 17/7037 606/250
9,271,758 B2 * 3/2016 Marik ..... A61B 17/7032
9,585,697 B2 * 3/2017 Stachniak ..... A61B 17/7035
9,649,133 B2 * 5/2017 Strnad ..... A61B 17/7037
2010/0094358 A1 * 4/2010 Moore ..... A61B 17/0642 606/319
2011/0098747 A1 * 4/2011 Donner ..... A61B 17/70 606/264
2011/0184470 A1 * 7/2011 Gorek ..... A61B 17/7011 606/279
2011/0230884 A1 * 9/2011 Mantzaris ..... A61B 17/1717 606/64
2011/0230920 A1 * 9/2011 Gorek ..... A61B 17/7001 606/305
2011/0282398 A1 * 11/2011 Overes ..... A61B 17/861 606/304
2013/0085534 A1 * 4/2013 Hainard ..... A61B 17/7055 606/278

(Continued)

*Primary Examiner* — Jacqueline Johanas

(57) **ABSTRACT**

A bone fixation element includes a distal end defining a longitudinal axis and being configured to penetrate tissue, a proximal end defining an axial opening disposed in communication with a transverse passageway and a fastener including a proximal portion having spaced apart walls that define an implant cavity and a distal portion disposed with the transverse passageway and configured to penetrate tissue. The distal end is disposable in spaced apart relation to the distal portion of the fastener within tissue. Methods of use are disclosed.
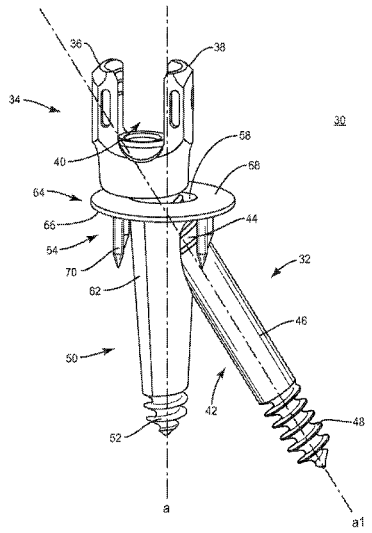
**20 Claims, 5 Drawing Sheets**