US009510863B2

(12) **United States Patent**
Robinson

(10) **Patent No.: US 9,510,863 B2**
(45) **Date of Patent: Dec. 6, 2016**

(54) **BONE SCREW COUPLING ASSEMBLY**

(71) Applicant: **James C. Robinson**, Atlanta, GA (US)

(72) Inventor: **James C. Robinson**, Atlanta, GA (US)

(73) Assignee: **SPECTRUM SPINE IP HOLDINGS, LLC**, Atlanta, GA (US)

(*) Notice: Subject to any disclaimer, the term of this patent is extended or adjusted under 35 U.S.C. 154(b) by 424 days.

(21) Appl. No.: **13/935,701**

(22) Filed: **Jul. 5, 2013**

(65) **Prior Publication Data**

US 2014/0005725 A1 Jan. 2, 2014

Related U.S. Application Data

(63) Continuation-in-part of application No. 13/540,049, filed on Jul. 2, 2012, now Pat. No. 8,491,640.

(51) **Int. Cl.**
A61B 17/70 (2006.01)

(52) **U.S. Cl.**
CPC ***A61B 17/7002*** (2013.01); ***A61B 17/7035*** (2013.01)

(58) **Field of Classification Search**
CPC A61B 17/7032; A61B 17/7034; A61B 17/7035; A61B 17/7037; A61B 17/7038; A61B 17/704; A61B 17/7041; A61B 17/7043; A61B 17/7044; A61B 17/7046
See application file for complete search history.

(56) **References Cited**

U.S. PATENT DOCUMENTS

2,855,232	A	10/1958	Kozak	
4,946,458	A	8/1990	Harms et al.	
5,010,879	A	4/1991	Moriya et al.	
5,281,222	A	1/1994	Allard et al.	
5,312,405	A	5/1994	Korotko et al.	
5,380,326	A	1/1995	Lin	
5,630,817	A	5/1997	Rokegem et al.	
6,210,413	B1	4/2001	Justis et al.	
6,254,602	B1	7/2001	Justis	
RE37,665	E	4/2002	Ralph et al.	
6,413,257	B1	7/2002	Lin et al.	
6,911,030	B1	6/2005	Vanacker et al.	
7,776,067	B2	8/2010	Jackson	
7,850,718	B2	12/2010	Bette et al.	
7,875,065	B2 *	1/2011	Jackson	606/305
7,892,259	B2	2/2011	Biedermann et al.	
7,901,436	B2	3/2011	Baccelli	
8,100,948	B2	1/2012	Ensign et al.	
8,221,472	B2 *	7/2012	Peterson et al.	606/270
8,267,969	B2 *	9/2012	Altarac et al.	606/269
8,491,640	B1	7/2013	Robinson	
2003/0125741	A1	7/2003	Biedermann et al.	
2004/0097933	A1	5/2004	Lourdel et al.	
2005/0027292	A1	2/2005	Bernard et al.	

(Continued)

FOREIGN PATENT DOCUMENTS

FR	2696091	A1	4/1994
JP	2005007048	A	1/2005
WO	2004064653	A1	8/2004

Primary Examiner — Mary Hoffman
(74) *Attorney, Agent, or Firm* — FisherBroyles, LLP; Anthony J. DoVale

(57) **ABSTRACT**

A coupling assembly is presented. The coupling assembly is used to selectively couple a bone screw having an elongate shaft and a head to an elongate rod. The coupling assembly has a coupling element configured to engage the head of a bone screw, as well as the elongate rod. When the elongate rod is engaged by the portion of the top of the coupling element, the coupling element does not extend above a top most portion of elongate rod.
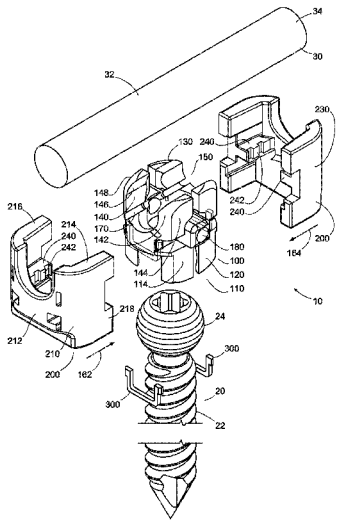
25 Claims, 13 Drawing Sheets