US009408563B2

(12) **United States Patent**
Butz et al.

(10) **Patent No.: US 9,408,563 B2**
(45) **Date of Patent: Aug. 9, 2016**

(54) **PIERCING DEVICE WITH ROTARY ELEMENT**

(75) Inventors: **Marion Butz**, Regensburg (DE); **Michael-Martin Strehl**, Pfreimd (DE)

(73) Assignee: **Gerresheimer Regensburg GMBH**, Regensburg (DE)

(*) Notice: Subject to any disclaimer, the term of this patent is extended or adjusted under 35 U.S.C. 154(b) by 430 days.

(21) Appl. No.: **14/008,498**

(22) PCT Filed: **Mar. 15, 2012**

(86) PCT No.: **PCT/EP2012/054519**

§ 371 (c)(1),
(2), (4) Date: **Jan. 2, 2014**

(87) PCT Pub. No.: **WO2012/130619**

PCT Pub. Date: **Oct. 4, 2012**

(65) **Prior Publication Data**

US 2014/0128897 A1 May 8, 2014

(30) **Foreign Application Priority Data**

Mar. 31, 2011 (DE) 10 2011 015 758

(51) **Int. Cl.**

A61B 17/14	(2006.01)
A61B 5/15	(2006.01)
A61B 5/151	(2006.01)

(52) **U.S. Cl.**

CPC ***A61B 5/1411*** (2013.01); ***A61B 5/1519*** (2013.01); ***A61B 5/150022*** (2013.01); ***A61B 5/15113*** (2013.01); ***A61B 5/15117*** (2013.01); ***A61B 5/15128*** (2013.01); ***A61B 5/150412*** (2013.01); ***A61B 5/150503*** (2013.01); *A61B 5/15003* (2013.01)

(58) **Field of Classification Search**

CPC A61B 5/1411; A61B 5/150022; A61B 5/15003; A61B 5/150412; A61B 5/15113; A61B 5/15128; A61B 5/1519

See application file for complete search history.

(56) **References Cited**

U.S. PATENT DOCUMENTS

4,924,879	A	5/1990	O'Brien
5,545,174	A	8/1996	Schenk et al.

(Continued)

FOREIGN PATENT DOCUMENTS

EP	1090584	A2	4/2001
WO	WO 2008/107382	A1	9/2008
WO	WO 2009/147080	A1	12/2009

OTHER PUBLICATIONS

International Search Report, International Application No. PCT/EP2012/054519, English Language, Jul. 2, 2012, 3 pages.

(Continued)

Primary Examiner — Robert Lynch
(74) *Attorney, Agent, or Firm* — Lathrop & Gage LLP

(57) **ABSTRACT**

The invention relates to a piercing device for taking blood for medical analyses, comprising a base body, comprising at least one needle which is arranged therein and a tip which can be extended, comprising a needle holding element which encloses the needle at least in part and a drive unit for driving a movement of the needle together with the needle holding element with respect to the base body.
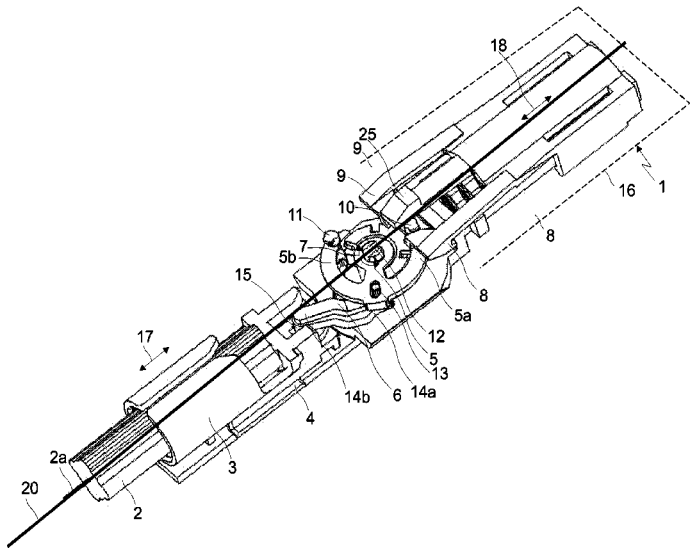
11 Claims, 10 Drawing Sheets