June 2, 1931. M. L. PATERSON 1,808,063

FOOTWEAR

Filed July 16, 1929

Fig. 1

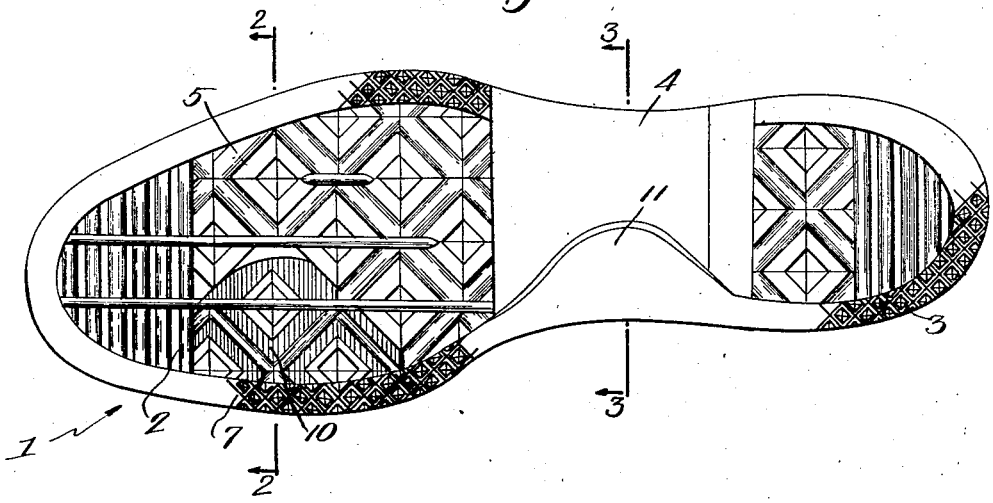

Fig. 2

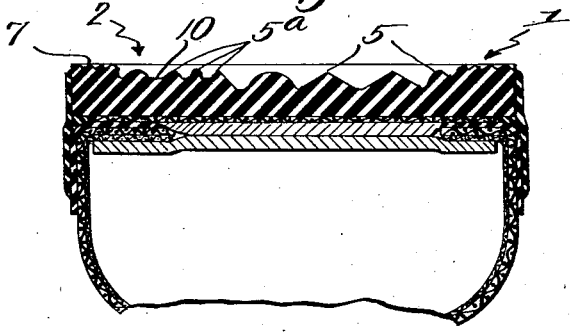

Fig. 3

Inventor
Morton L. Paterson
by Roberts, Cushman & Woodbury
his Attorneys.