PROCESS FOR AGGLOMERATION

Original Filed Dec. 26, 1967 4 Sheets-Sheet 1

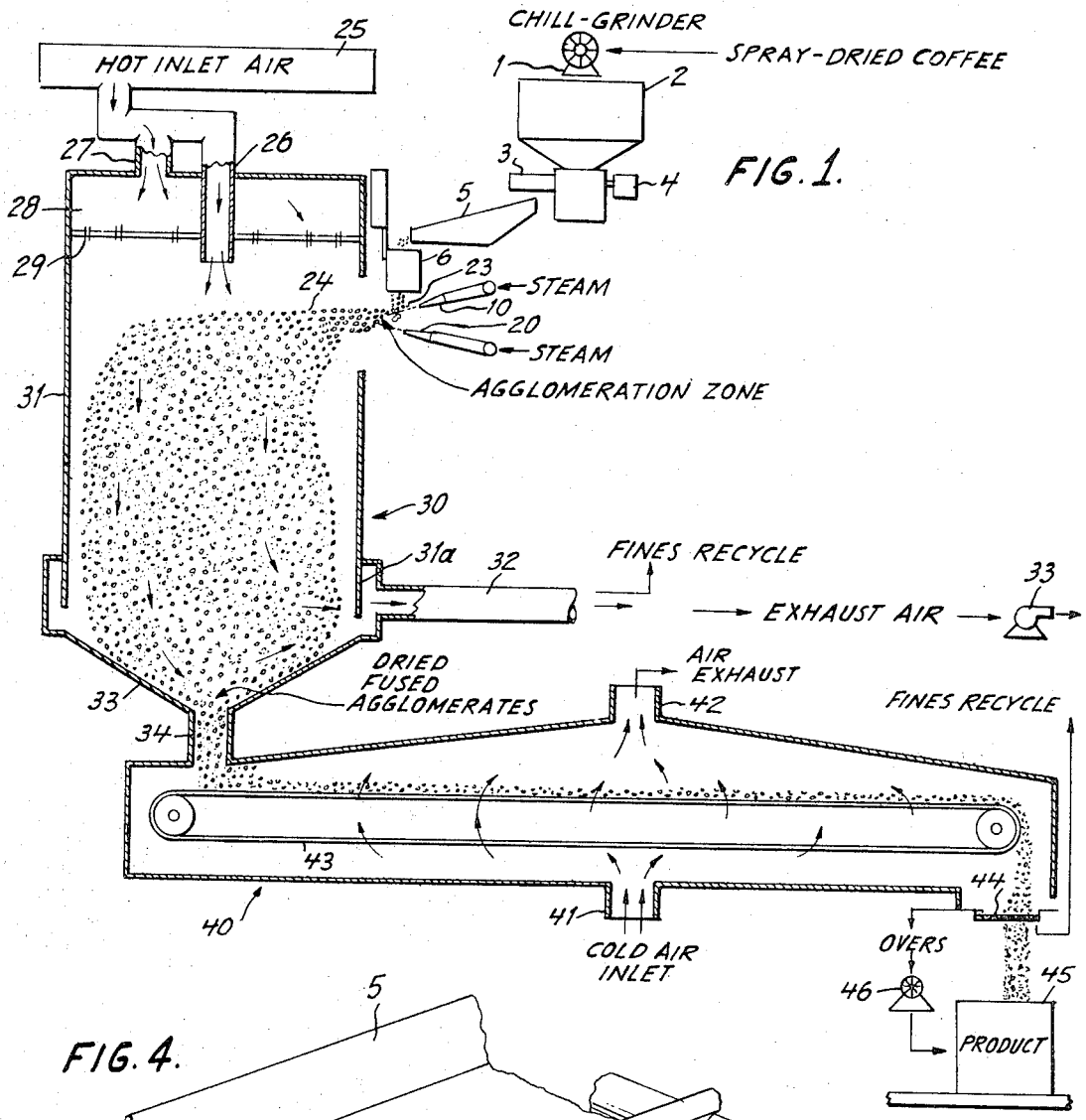


FIG. 1.

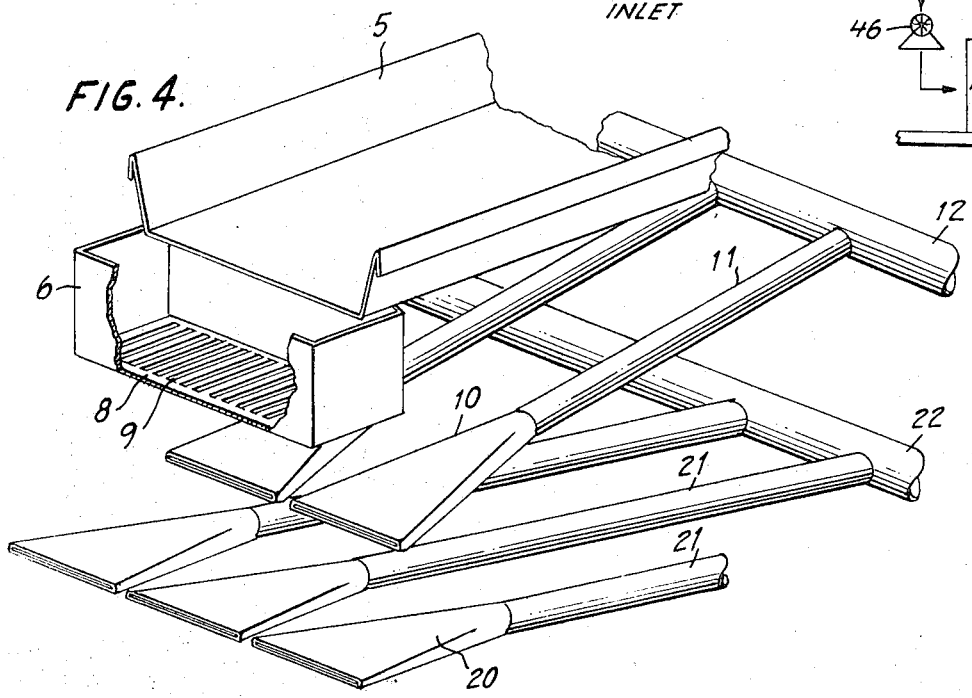

FIG. 4.