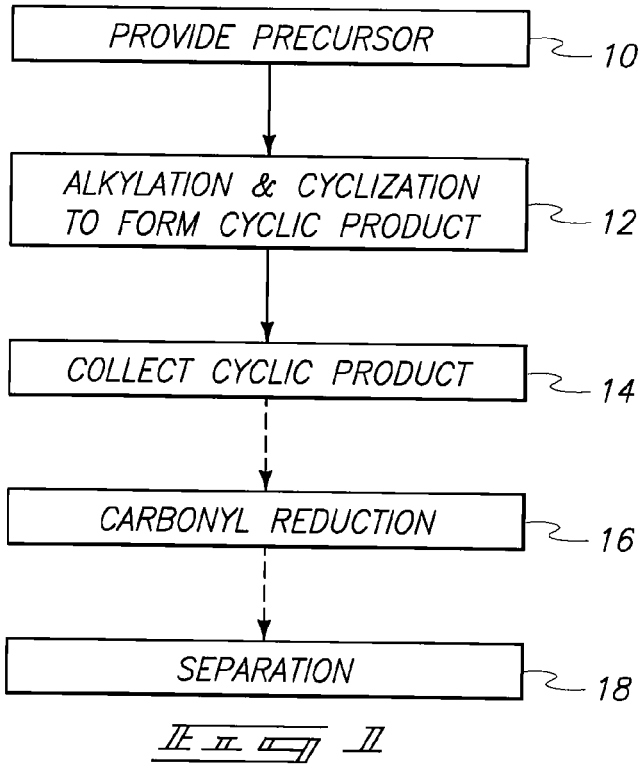
PROVIDE PRECURSOR
10
ALKYLATION & CYCLIZATION TO FORM CYCLIC PRODUCT
12
COLLECT CYCLIC PRODUCT
14
CARBONYL REDUCTION
16
SEPARATION
18

Fig. 1

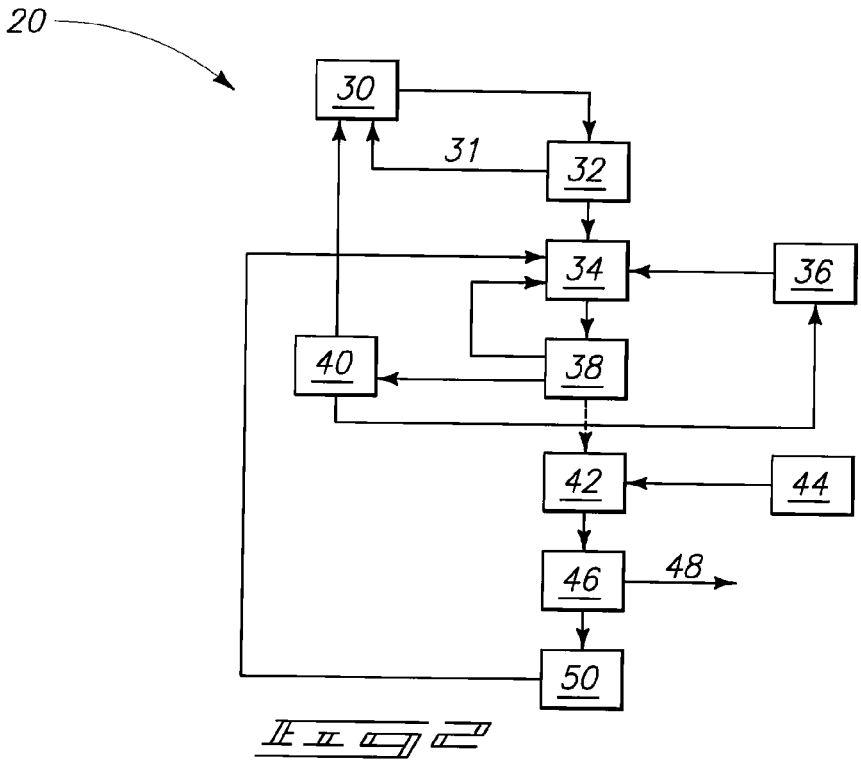
20
30
31
32
34
36
40
38
42
44
46
48
50

Fig. 2