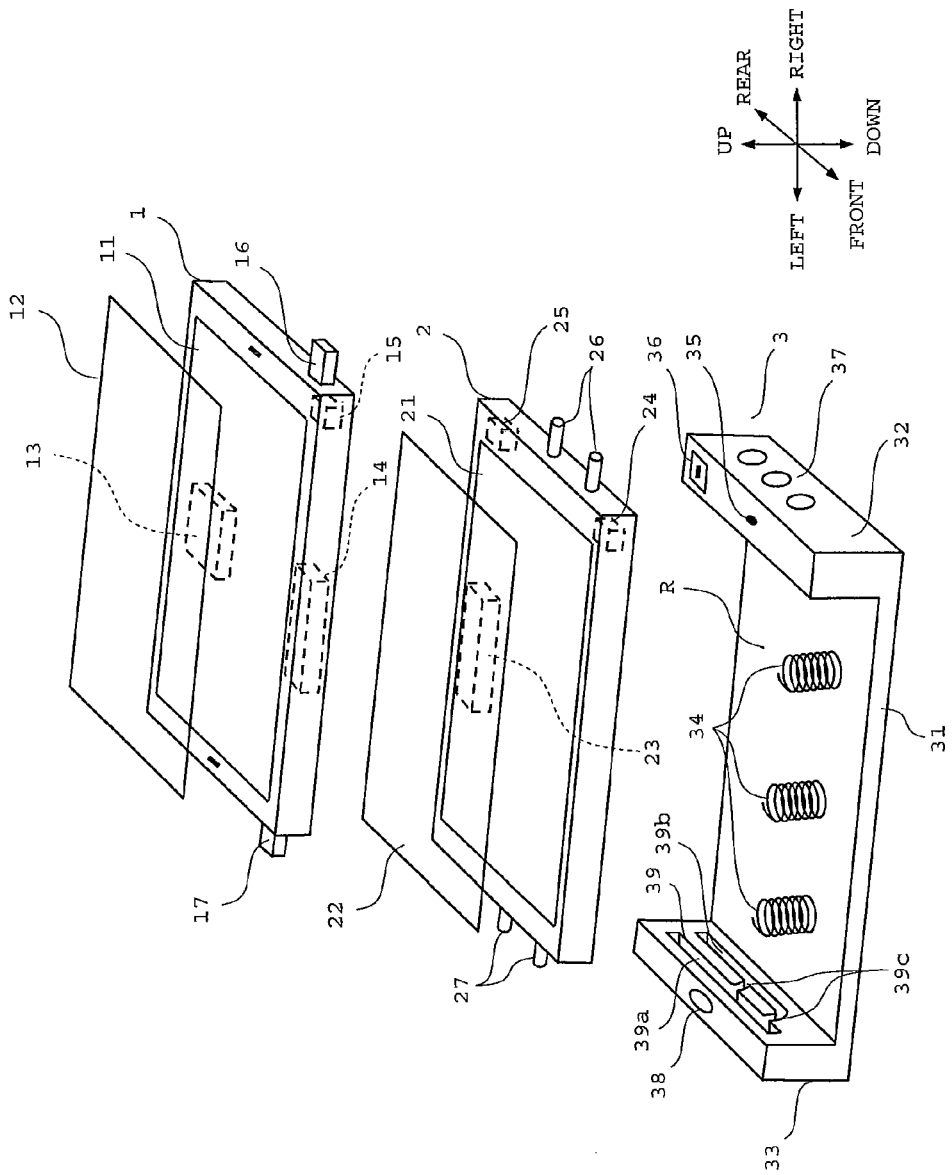
UP
REAR
RIGHT
LEFT
FRONT
DOWN
1
11
12
13
14
15
16
17
2
21
22
23
24
25
26
27
3
31
32
33
34
35
36
37
38
39
39a
39b
39c
R

FIG.1