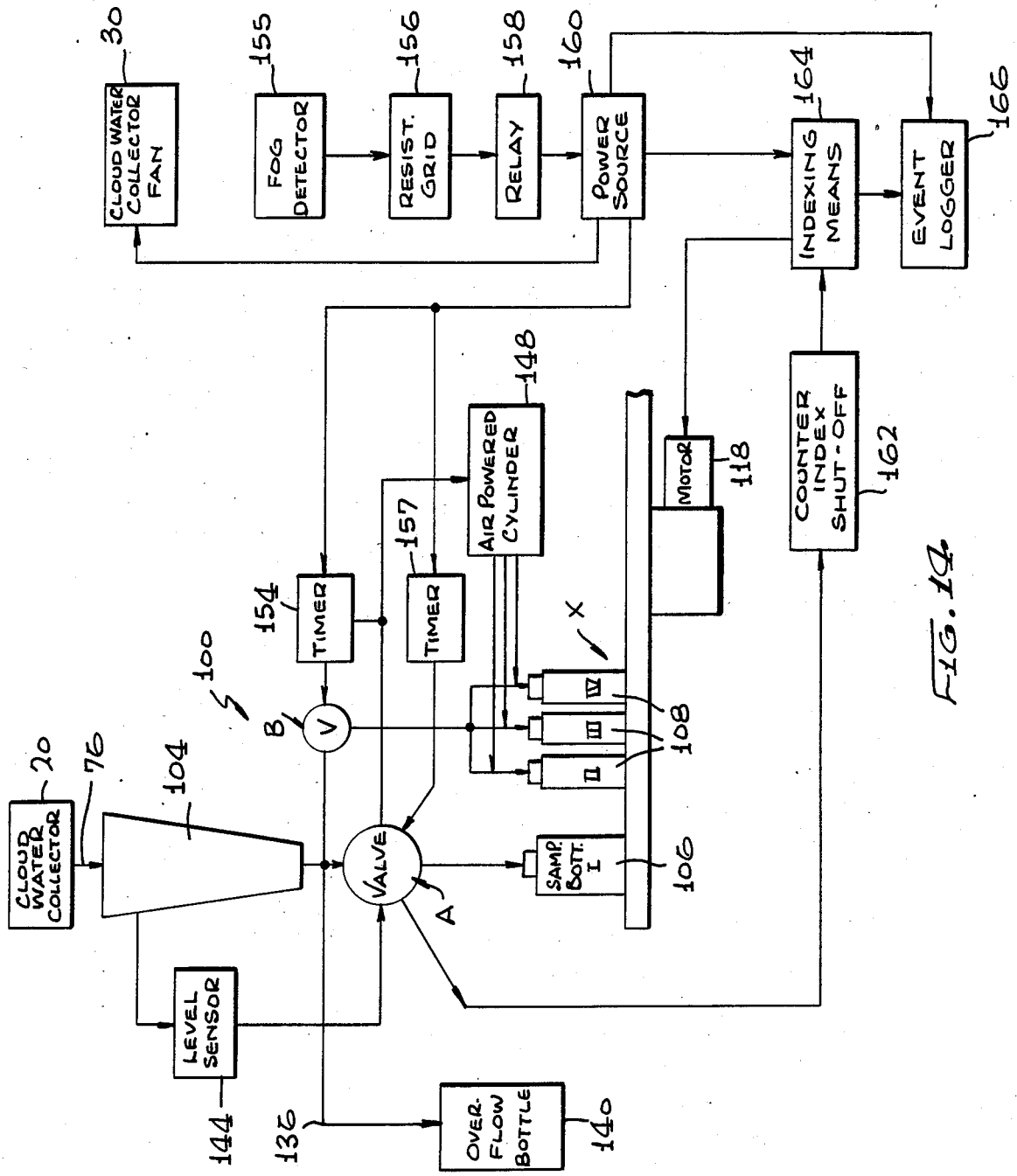
CLOUD WATER COLLECTOR FAN
30
FOG DETECTOR
155
RESIST. GRID
156
RELAY
158
POWER SOURCE
160
INDEXING MEANS
164
EVENT LOGGER
166
COUNTER INDEX SHUT-OFF
162
MOTOR
118
AIR POWERED CYLINDER
148
TIMER
154
TIMER
157
X
IV
III
II
108
SAMP. BOTT. I
106
VALVE
A
B
V
100
CLOUD WATER COLLECTOR
20
76
104
LEVEL SENSOR
144
136
OVER-FLOW BOTTLE
140

FIG. 14

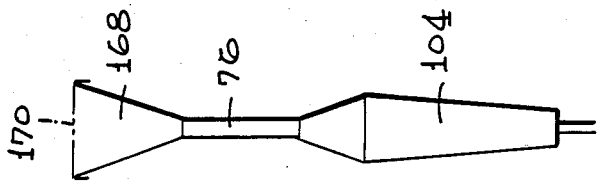
170
168
76
104

FIG. 15