US008596862B1

(12) **United States Patent**
Pfeifer et al.

(10) **Patent No.: US 8,596,862 B1**
(45) **Date of Patent: Dec. 3, 2013**

(54) **WIRELESS PASSIVE RADIATION SENSOR**

(75) Inventors: **Kent B. Pfeifer**, Los Lunas, NM (US); **Arthur N. Rumpf**, Albuquerque, NM (US); **William G. Yelton**, Sandia Park, NM (US); **Steven J. Limmer**, Albuquerque, NM (US)

(73) Assignee: **Sandia Corporation**, Albuquerque, NM (US)

(*) Notice: Subject to any disclaimer, the term of this patent is extended or adjusted under 35 U.S.C. 154(b) by 52 days.

(21) Appl. No.: **13/540,465**

(22) Filed: **Jul. 2, 2012**

Related U.S. Application Data

(63) Continuation-in-part of application No. 12/871,602, filed on Aug. 30, 2010, now Pat. No. 8,240,911.

(51) **Int. Cl.**
G01K 11/26 (2006.01)

(52) **U.S. Cl.**
USPC **374/117**; 374/E11.011

(58) **Field of Classification Search**
USPC 374/117–120, 110, 137, 184, 187, 208, 374/E11.011
See application file for complete search history.

(56) **References Cited**

U.S. PATENT DOCUMENTS

8,240,911 B1 * 8/2012 Pfeifer et al. 374/117
8,348,504 B2 * 1/2013 Gregory et al. 374/152
2011/0156916 A1 6/2011 Savignac et al.
2013/0003779 A1 * 1/2013 Fukuda et al. 374/117
2013/0136152 A1 * 5/2013 Draeger et al. 374/183

OTHER PUBLICATIONS

M. Viens and J. David N. Cheeke, Highly Sensitive Temperature Sensor Using SAW Resonator Oscillator, Sensors and Actuators A, 24 (1990), pp. 209-211.
L. Mingfang and L. Haiguo, SAW Temperature and Humidity Sensor with High Resolution, Sensors and Actuators B, 12 (1993), pp. 53-56.
J.D. Sternhagen, et al., A Novel Integrated Acoustic Gas and Temperature Sensor, IEEE Sensors Journal, vol. 2, No. 4 (Aug. 2002), pp. 301-306.
G. Scholl, et al., Surface Acoustic Wave Devices for Sensor Applications, Phys. Stat. Sol. (a) 185, No. 1 (2001), pp. 47-58.
A. Von Jena, et al., Intelligent Sensor for Monitoring Freight-Waggon Working Conditions, Sensors and Actuators A, 41-42 (1994), pp. 347-353.

* cited by examiner

Primary Examiner — Yaritza Guadalupe-McCall
(74) *Attorney, Agent, or Firm* — Kevin W. Bieg

(57) **ABSTRACT**

A novel measurement technique is employed using surface acoustic wave (SAW) devices, passive RF, and radiation-sensitive films to provide a wireless passive radiation sensor that requires no batteries, outside wiring, or regular maintenance. The sensor is small (<1 cm^2), physically robust, and will operate unattended for decades. In addition, the sensor can be insensitive to measurement position and read distance due to a novel self-referencing technique eliminating the need to measure absolute responses that are dependent on RF transmitter location and power.
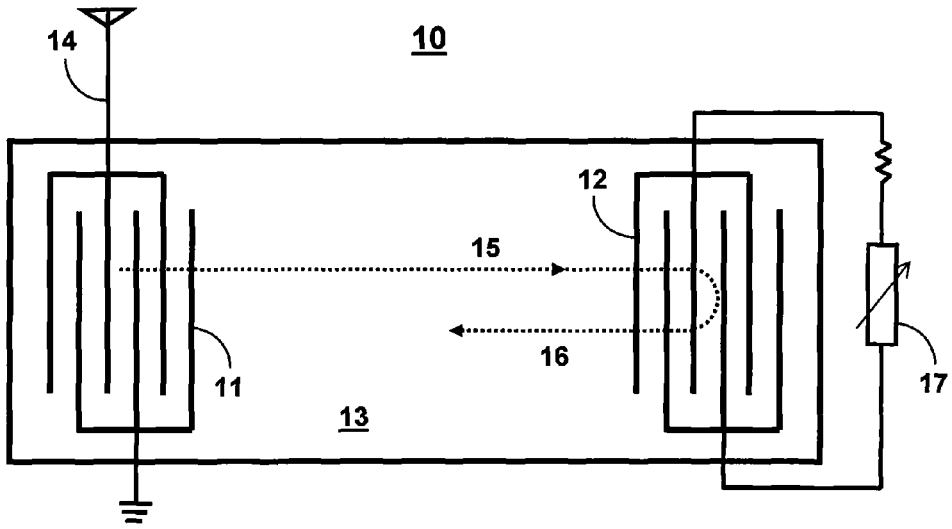
11 Claims, 5 Drawing Sheets