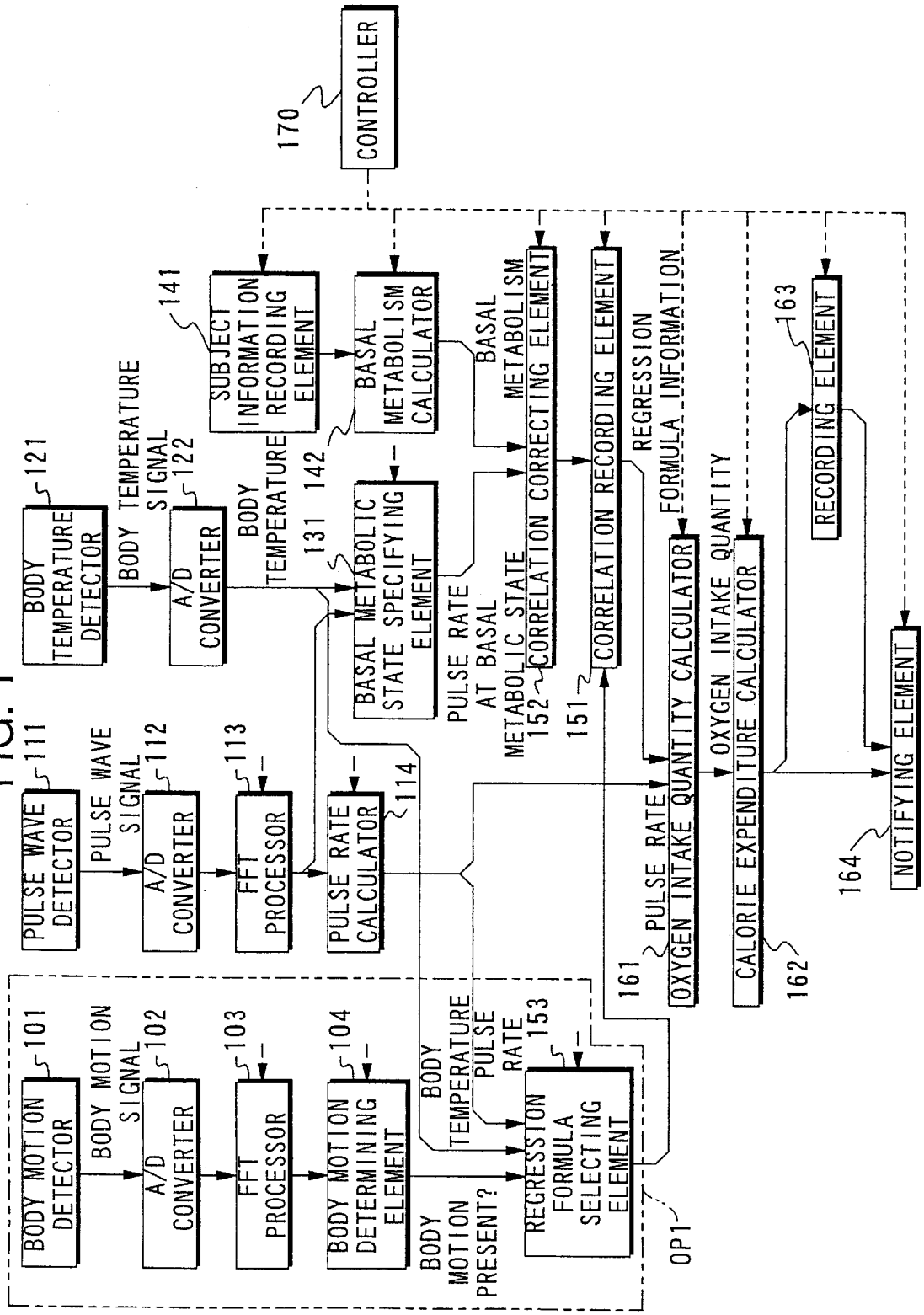
CONTROLLER
170
SUBJECT INFORMATION RECORDING ELEMENT
141
BASAL METABOLISM CALCULATOR
142
BASAL METABOLISM
BODY TEMPERATURE DETECTOR
121
BODY TEMPERATURE SIGNAL
A/D CONVERTER
122
BODY TEMPERATURE
131
BASAL METABOLIC STATE SPECIFYING ELEMENT
PULSE RATE AT BASAL METABOLIC STATE
CORRELATION CORRECTING ELEMENT
152
CORRELATION RECORDING ELEMENT
151
REGRESSION FORMULA INFORMATION
RECORDING ELEMENT
163
NOTIFYING ELEMENT
164
PULSE WAVE DETECTOR
111
PULSE WAVE SIGNAL
A/D CONVERTER
112
FFT PROCESSOR
113
PULSE RATE CALCULATOR
114
PULSE RATE
OXYGEN INTAKE QUANTITY CALCULATOR
161
OXYGEN INTAKE QUANTITY
CALORIE EXPENDITURE CALCULATOR
162
BODY MOTION DETECTOR
101
BODY MOTION SIGNAL
A/D CONVERTER
102
FFT PROCESSOR
103
BODY MOTION DETERMINING ELEMENT
104
BODY MOTION PRESENT?
BODY TEMPERATURE
PULSE RATE
REGRESSION FORMULA SELECTING ELEMENT
153
OP1

FIG. 1