US006287262B1

(12) **United States Patent**
Amano et al.

(10) **Patent No.: US 6,287,262 B1**
(45) **Date of Patent: Sep. 11, 2001**

(54) **DEVICE FOR MEASURING CALORIE EXPENDITURE AND DEVICE FOR MEASURING BODY TEMPERATURE**

(75) Inventors: **Kazuhiko Amano**, Suwa; **Kazuo Uebaba**, Yokohama; **Hitoshi Ishiyama**, Toride, all of (JP)

(73) Assignee: **Seiko Epson Corporation**, Tokyo (JP)

(*) Notice: Subject to any disclaimer, the term of this patent is extended or adjusted under 35 U.S.C. 154(b) by 0 days.

(21) Appl. No.: **09/491,045**

(22) Filed: **Jan. 25, 2000**

Related U.S. Application Data

(62) Division of application No. 09/011,554, filed on Feb. 9, 1998, now Pat. No. 6,030,342.

(30) **Foreign Application Priority Data**

Jun. 12, 1996 (JP) 8-151378
Nov. 20, 1996 (JP) 8-309749
May 16, 1997 (JP) 9-127648

(51) **Int. Cl.**[7] **A61B 5/02**; A61B 5/00
(52) **U.S. Cl.** **600/500**; 600/300; 600/301
(58) **Field of Search** 600/300, 301, 600/500, 501, 502, 503, 549

(56) **References Cited**

U.S. PATENT DOCUMENTS

4,090,504 5/1978 Nathan .
4,312,358 * 1/1982 Barney 600/483
4,380,802 * 4/1983 Segar et al. 600/300
5,509,422 4/1996 Fukami .
5,515,858 5/1996 Myllymaki .
5,640,965 * 6/1997 Maeyama 600/502
5,941,837 * 8/1999 Amano et al. 600/595

FOREIGN PATENT DOCUMENTS

0 559 203 9/1993 (EP) .
54-62878 5/1979 (JP) .
2-80029 3/1990 (JP) .
4-253839 9/1992 (JP) .
6-10144 1/1994 (JP) .
6-142087 5/1994 (JP) .
8-52119 2/1996 (JP) .
8-80287 3/1996 (JP) .
8-126632 5/1996 (JP) .
8-131425 5/1996 (JP) .

* cited by examiner

Primary Examiner—John P. Lacyk
Assistant Examiner—Navin Natnithithadha

(57) **ABSTRACT**

In order to obtain calorie expenditure with good accuracy, the device is provided with a basal metabolic state specifying element **(142)** which specifies the subject's basal metabolic state from his body temperature; a correlation storing element **(151)** which stores respective regression formulas showing the correlation between the pulse rate and the calorie expenditure when the subject is at rest or active; a correlation correcting element **(152)** which correcting the stored regression formulas using the basal metabolic state; a body motion determining element **(104)** which determines whether or not the subject is at rest; and a regression formula selecting element **(153)** which selects the regression formula which should be used in accordance with the results of this determination. The subject's pulse rate is applied in the selected regression formula, and the calorie expenditure corresponding to this pulse rate is calculated by calorie expenditure calculator **(162)**.
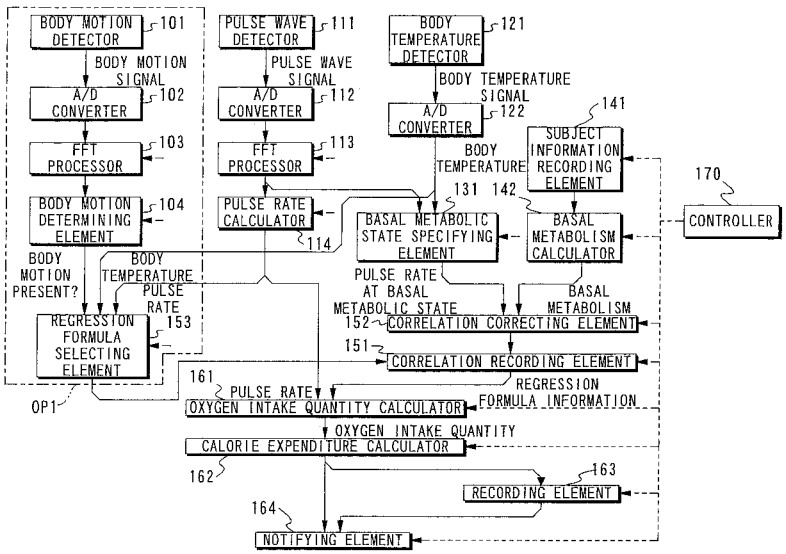
20 Claims, 34 Drawing Sheets