May 9, 1961 O. B. BERLINGS 2,983,462

FILM CASSETTE

Filed May 20, 1958

FIG. 1

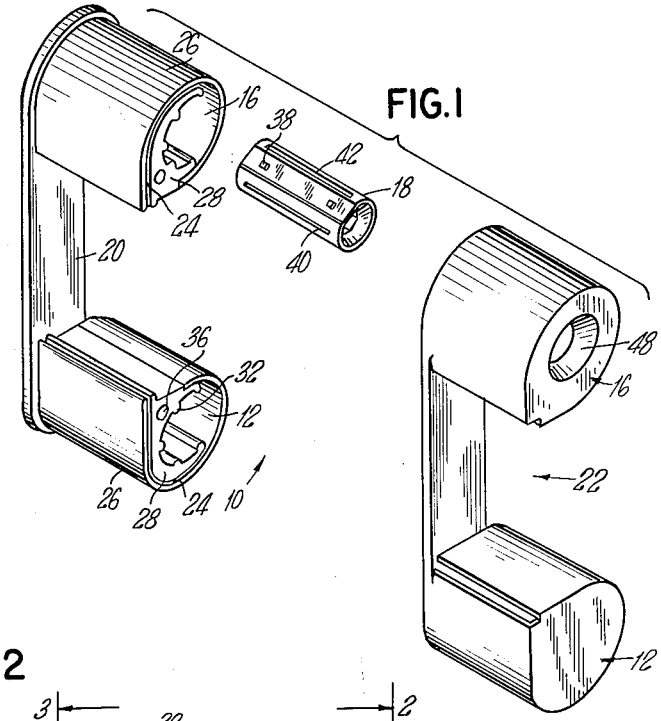

FIG. 2

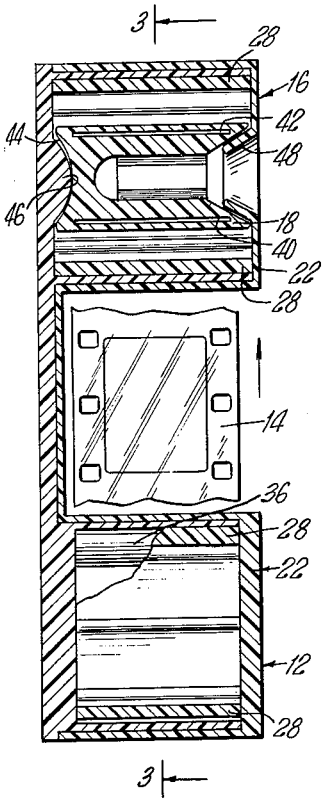

FIG. 3

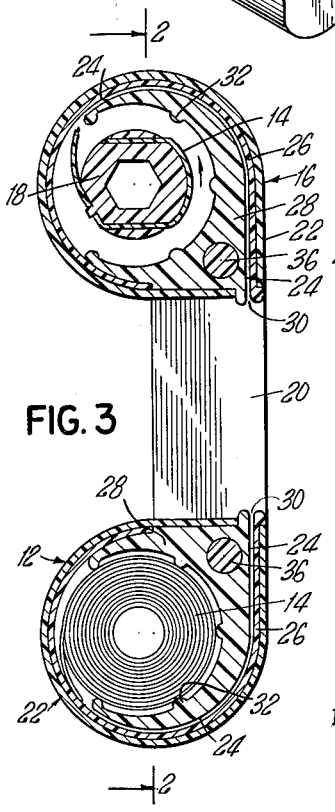

FIG. 4

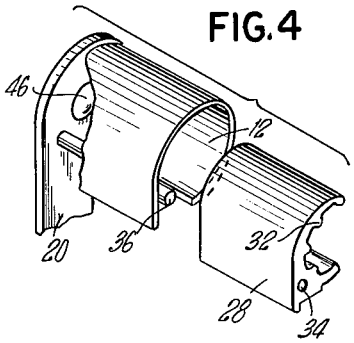

INVENTOR.
ORESTS B. BERLINGS
BY Howard Myles Schwinger
ATTORNEY