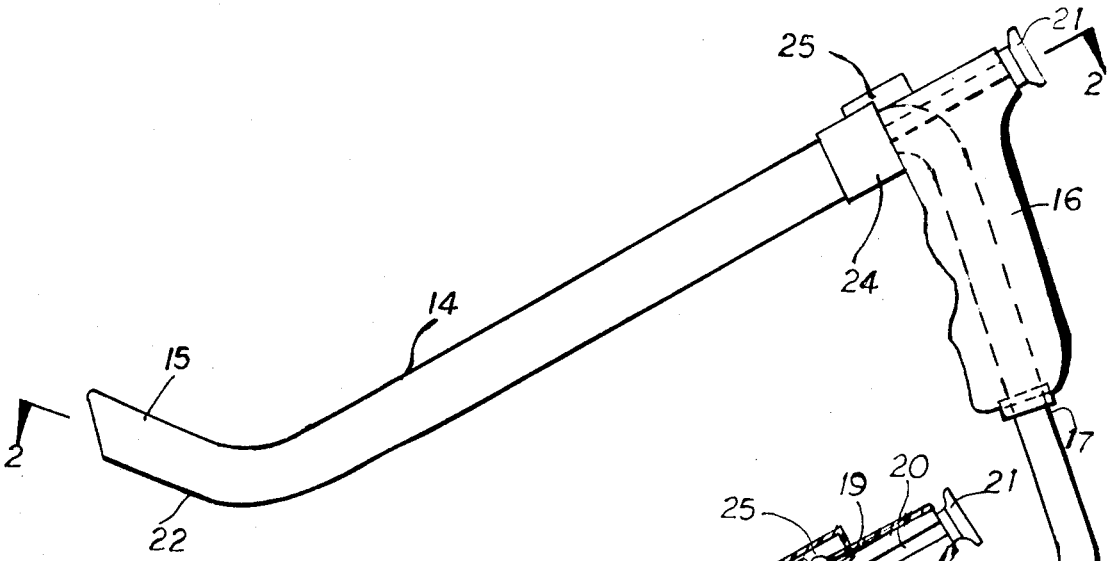

FIG. 1.

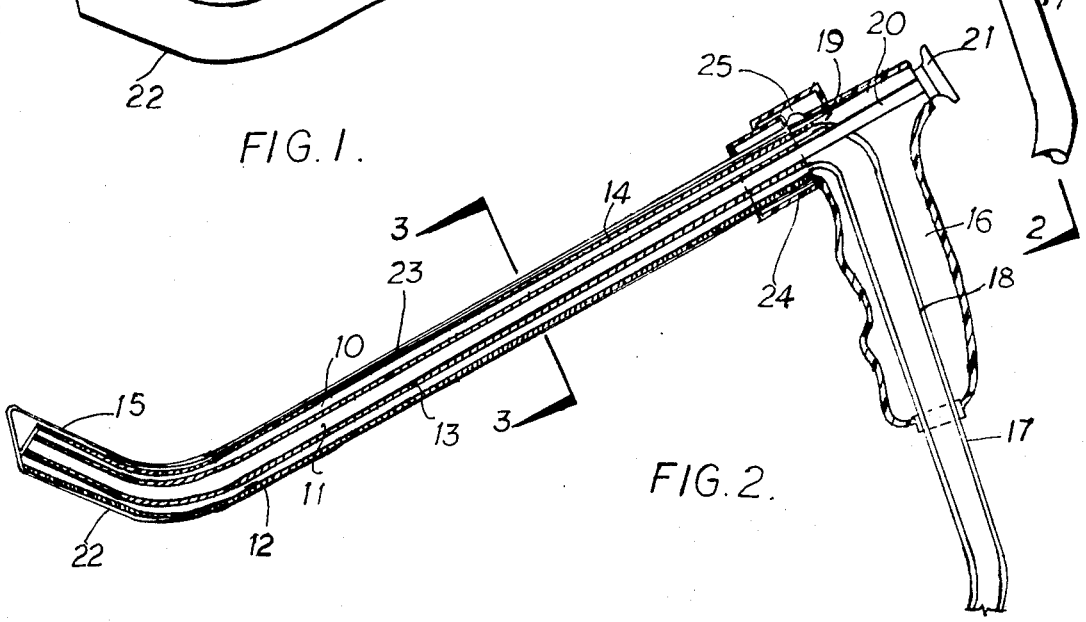

FIG. 2.

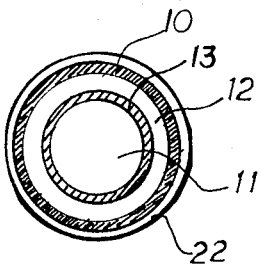

FIG. 3.

INVENTOR
HENRY J. ZUKOWSKI
BY Whittemore / Hulbert & Belknap