US005771562A

United States Patent [19]

Harvey, III et al.

[11] **Patent Number: 5,771,562**

[45] **Date of Patent: Jun. 30, 1998**

[54] **PASSIVATION OF ORGANIC DEVICES**

[75] Inventors: **Thomas B. Harvey, III**, Scottsdale; **Franky So**, Tempe, both of Ariz.

[73] Assignee: **Motorola, Inc.**, Schaumburg, Ill.

[21] Appl. No.: **433,909**

[22] Filed: **May 2, 1995**

[51] **Int. Cl.**[6] **H01S 4/00**

[52] **U.S. Cl.** **29/592.1**; 257/433; 257/710; 313/504; 313/512

[58] **Field of Search** 29/592.1; 257/433, 257/710; 313/504, 512; 445/25, 41, 43

[56] **References Cited**

U.S. PATENT DOCUMENTS

3,217,169	11/1965	Grimmeiss et al.	313/512
3,807,833	4/1974	Graham et al.	445/25
4,097,889	6/1978	Kern et al. .	
4,767,679	8/1988	Kawachi	313/504
5,047,687	9/1991	Van Slyke	313/503
5,059,861	10/1991	Littman et al.	313/503
5,073,446	12/1991	Scozzafava et al.	428/323
5,124,204	6/1992	Yamashita et al.	313/512
5,394,011	2/1995	Yamamoto et al.	257/710

OTHER PUBLICATIONS

Radio Shack Dictionary of Electronics, 1974–1975, Def. of "Passivation" p. 410.

Primary Examiner—P. W. Echols
Attorney, Agent, or Firm—Eugene A. Parsons

[57] **ABSTRACT**

A method of passivating organic devices positioned on a supporting substrate including the steps of overcoating the organic device with a low temperature deposited film of dielectric material, and sealingly engaging an inorganic layer over the dielectric material so as to substantially hermetically seal the organic device. In a typical embodiment, the dielectric layer is SiO_2 and the inorganic layer is a metal can.
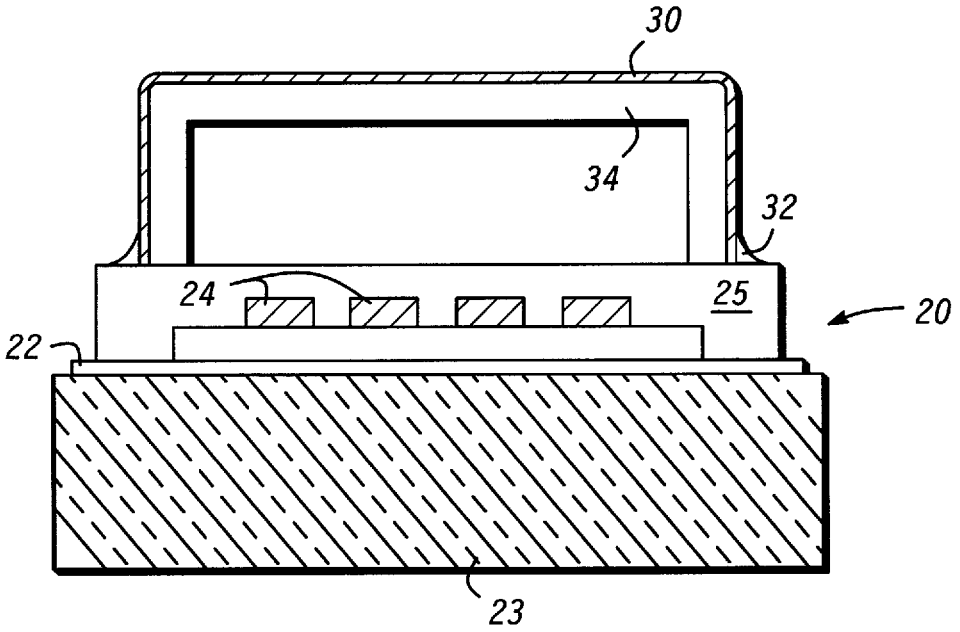
15 Claims, 1 Drawing Sheet