US005962962A

United States Patent [19]

Fujita et al.

[11] **Patent Number: 5,962,962**

[45] **Date of Patent: Oct. 5, 1999**

[54] **METHOD OF ENCAPSULATING ORGANIC ELECTROLUMINESCENCE DEVICE AND ORGANIC ELECTROLUMINESCENCE DEVICE**

[75] Inventors: **Masato Fujita**, Tokyo; **Kenichi Fukuoka**, Sodegaura, both of Japan

[73] Assignee: **Idemitsu Kosan Co., Ltd.**, Tokyo, Japan

[21] Appl. No.: **08/793,932**

[22] PCT Filed: **Sep. 5, 1995**

[86] PCT No.: **PCT/JP95/01764**

§ 371 Date: **Mar. 5, 1997**

§ 102(e) Date: **Mar. 5, 1997**

[87] PCT Pub. No.: **WO96/08122**

PCT Pub. Date: **Mar. 14, 1996**

[30] **Foreign Application Priority Data**

Sep. 8, 1994 [JP] Japan 6-214718
Jul. 21, 1995 [JP] Japan 7-185968

[51] **Int. Cl.**[6] **H05B 33/04**

[52] **U.S. Cl.** **313/412**; 313/509; 313/512; 313/498; 445/38; 445/43; 445/44; 445/53

[58] **Field of Search** 313/509, 512, 313/498, 504; 445/38, 43, 44, 53

[56] **References Cited**

U.S. PATENT DOCUMENTS

4,446,399 5/1984 Endo et al. 313/512
4,810,931 3/1989 McKenna et al. 313/512

FOREIGN PATENT DOCUMENTS

5-89961 4/1993 Japan .
5-129080 5/1993 Japan .

Primary Examiner—Nimeshkumar D. Patel
Attorney, Agent, or Firm—Frishauf, Holtz, Goodman, Langer & Chick, P.C.

[57] **ABSTRACT**

A method of encapsulation for an organic EL device, which overcomes the difficulty of conventional methods by fully preventing the growth of dark spots in the organic EL device by providing an inert liquid layer having a dissolved oxygen concentration of 1 ppm or less on the periphery of the organic EL device.
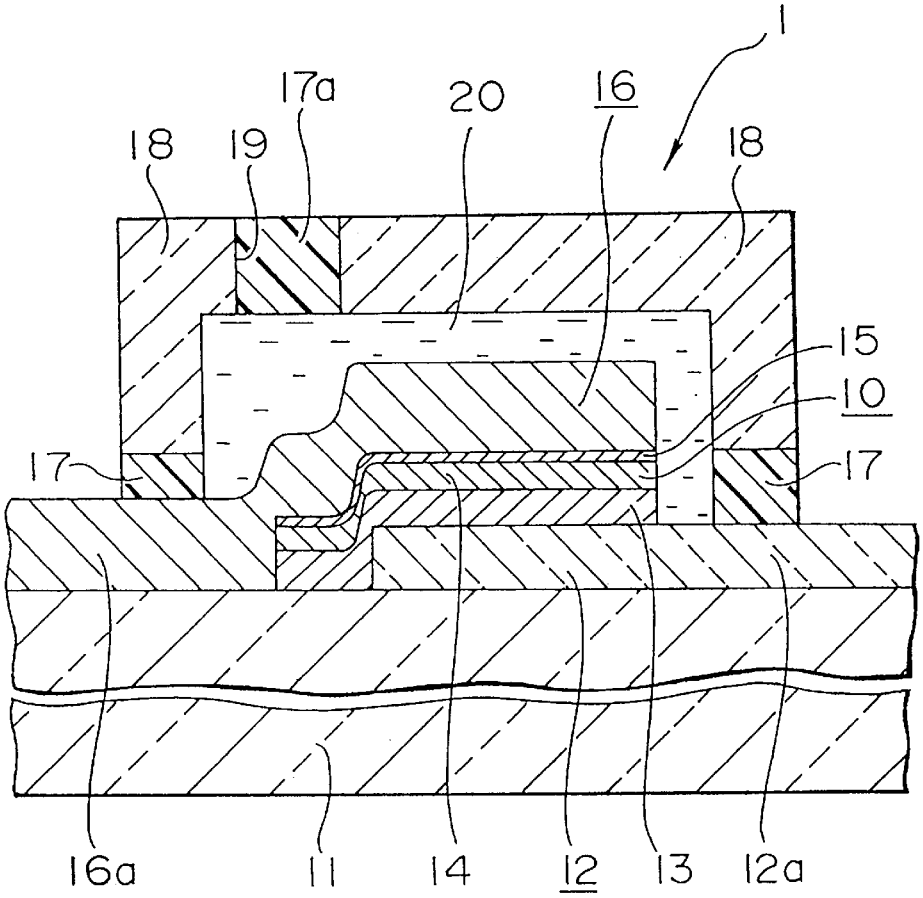
20 Claims, 2 Drawing Sheets