# United States Patent [19]

**Grendahl**

[11] **Patent Number: 4,759,762**

[45] **Date of Patent: Jul. 26, 1988**


[54] **ACCOMMODATING LENS**


[76] Inventor: **Dennis T. Grendahl,** 2070 Shoreline Dr., Orono, Minn. 55391



[21] Appl. No.: **62,572**

[22] Filed: **Jun. 16, 1987**

**Related U.S. Application Data**

[63] Continuation of Ser. No. 709,807, Mar. 8, 1985, abandoned.

[51] **Int. Cl.**[4] ..... **A61F 2/16**

[52] **U.S. Cl.** ..... **623/6;** 351/161; 351/162; 351/172

[58] **Field of Search** ..... 623/6; 351/160, 161, 351/162, 168, 172



[56] **References Cited**

U.S. PATENT DOCUMENTS

| | | | |
|---|---|---|---|
| 3,034,403 | 5/1962 | Neefe | 351/162 |
| 3,037,425 | 6/1962 | De Carle | 351/161 |
| 3,339,997 | 9/1967 | Wesley | 351/161 |
| 3,454,332 | 7/1969 | Siegel | 351/162 |
| 4,402,579 | 9/1983 | Poler | 623/6 X |
| 4,435,856 | 3/1984 | L'Esperance | 623/6 |
| 4,605,409 | 8/1986 | Kelman | 623/6 |

FOREIGN PATENT DOCUMENTS

| | | | |
|---|---|---|---|
| 35177 | 1/1965 | German Democratic Rep. | 351/162 |

OTHER PUBLICATIONS

Americal IOL International Intraocular Lenses, Style 115, Style 100, Style 130 & 130A Lenses (1 page advertisement), Dec. 29, 1981.



*Primary Examiner*—Ronald L. Frinks
*Attorney, Agent, or Firm*—Hugh D. Jaeger



[57] **ABSTRACT**

An accommodating lens including a lens optic with two indexes of refraction, the indexes of refraction based on dual cylindrical materials of the lens optic or a dual composite material of the lens optic. The dual cylindrical material or dual composite material of the lens optic is of PMMA. The lens can be either a posterior chamber lens or an anterior chamber lens, and include a plurality of outwardly extending loops.

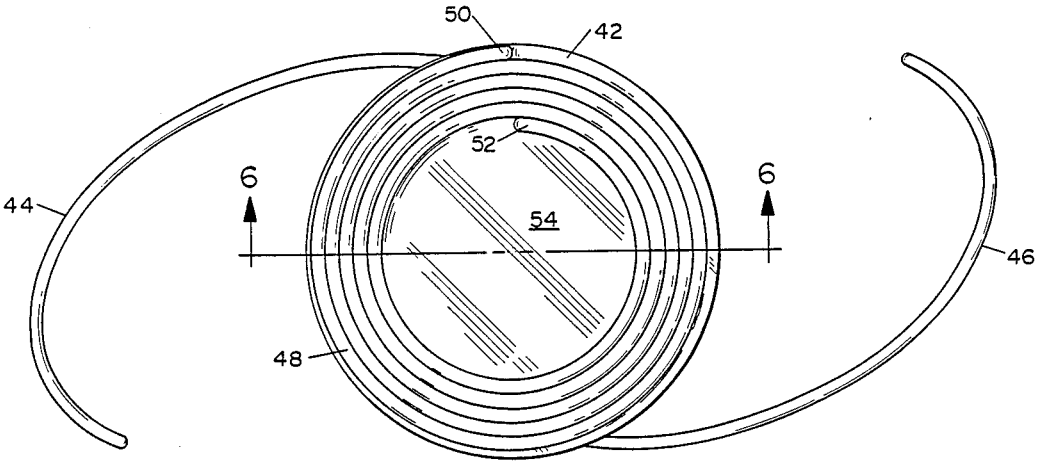
**4 Claims, 6 Drawing Sheets**