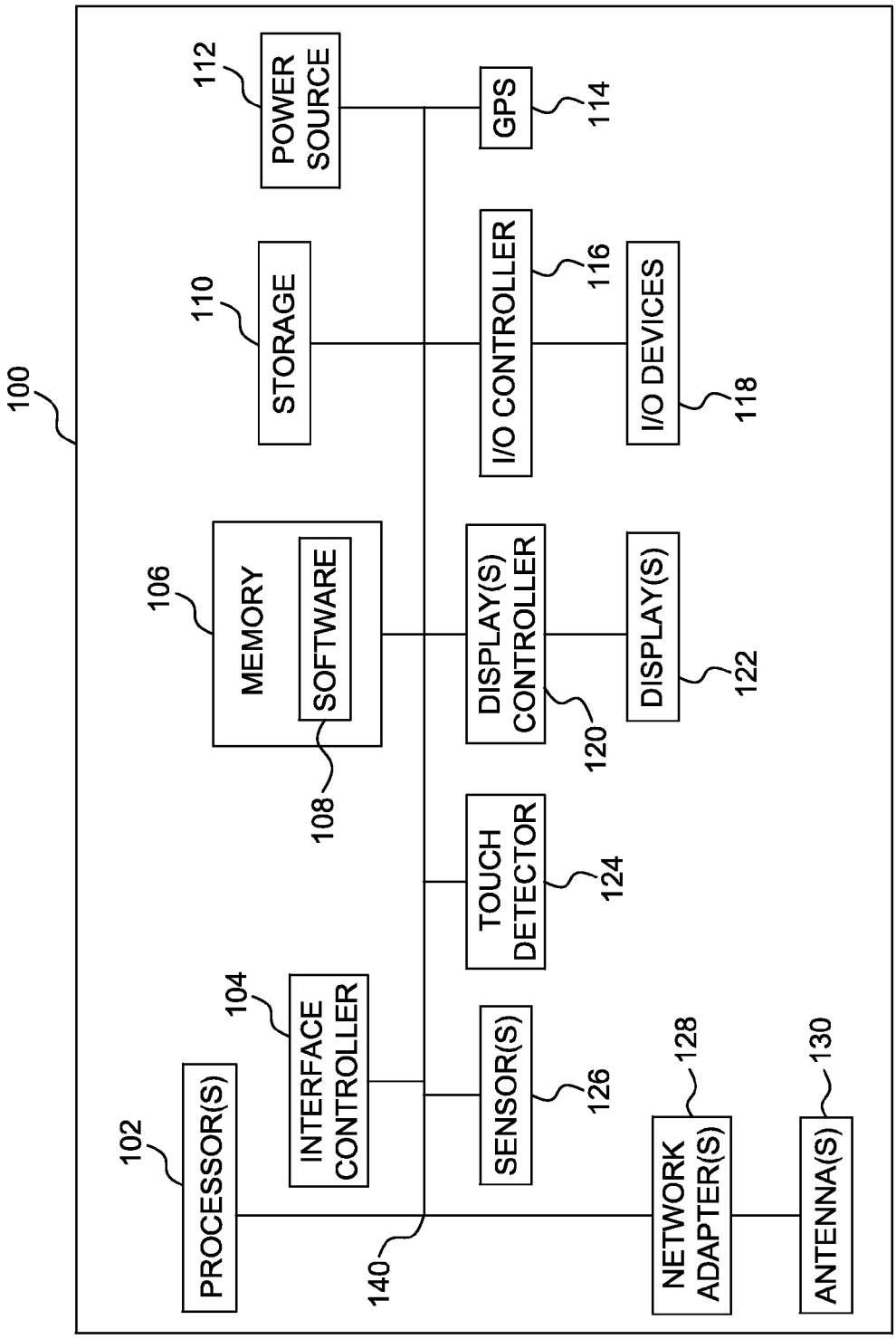
100
102
PROCESSOR(S)
104
INTERFACE CONTROLLER
106
MEMORY
108
SOFTWARE
110
STORAGE
112
POWER SOURCE
114
GPS
116
I/O CONTROLLER
118
I/O DEVICES
120
DISPLAY(S) CONTROLLER
122
DISPLAY(S)
124
TOUCH DETECTOR
126
SENSOR(S)
128
NETWORK ADAPTER(S)
130
ANTENNA(S)
140

FIG. 1