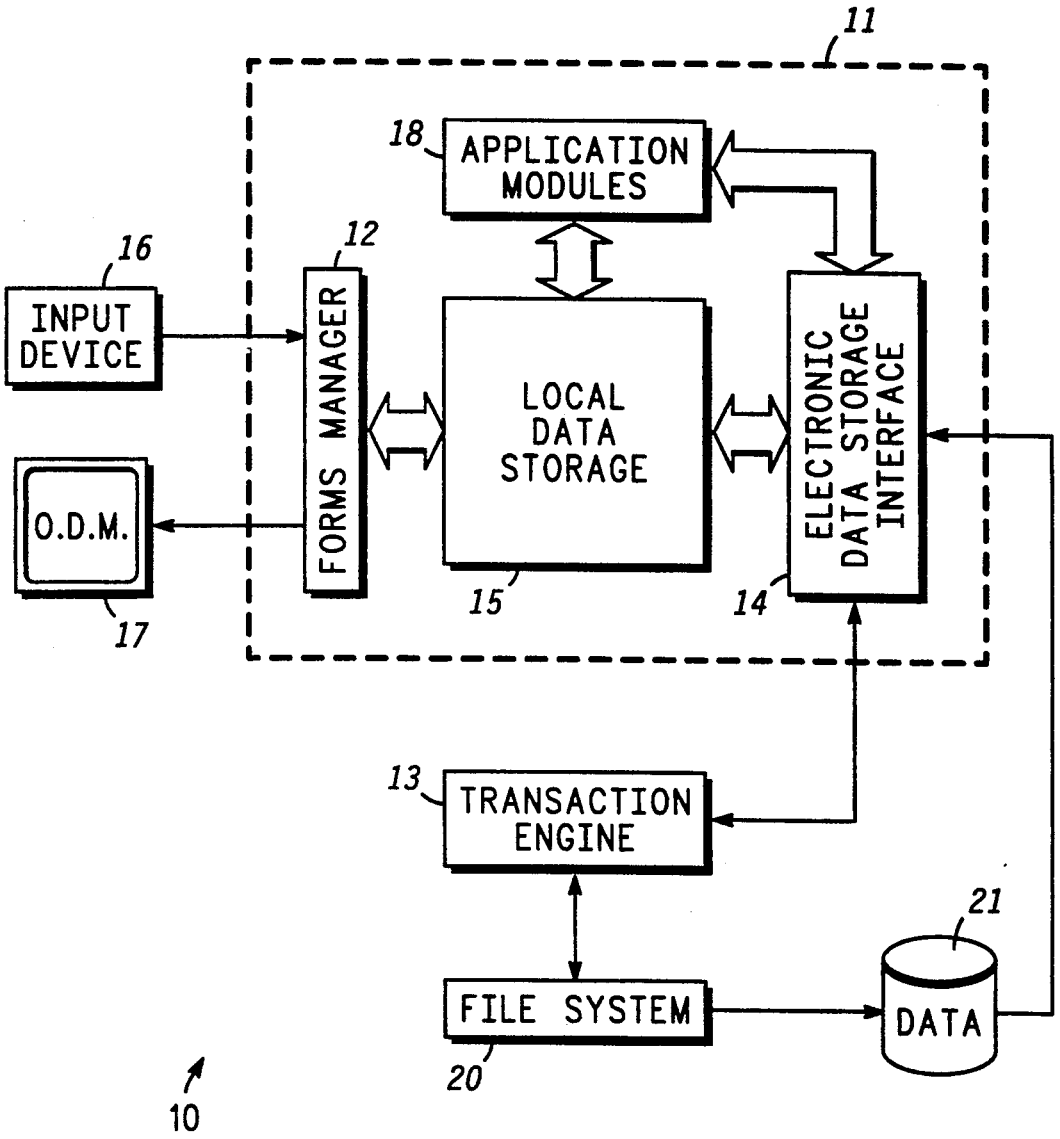
11
18
APPLICATION MODULES
16
12
INPUT DEVICE
FORMS MANAGER
LOCAL DATA STORAGE
ELECTRONIC DATA STORAGE INTERFACE
O.D.M.
17
15
14
13
TRANSACTION ENGINE
21
FILE SYSTEM
DATA
20
10

FIG. 1