United States Patent [19]

Ny

[11] **Patent Number: 4,543,562**

[45] **Date of Patent: Sep. 24, 1985**

[54] **MECHANICALLY-ACTUATED TOUCHBARS AND TOUCHPLATES USING MULTIPLE-CLOSURE SWITCHES**

[75] Inventor: **Nils O. Ny**, Levittown, Pa.

[73] Assignee: **RCA Corporation**, Princeton, N.J.

[21] Appl. No.: **410,547**

[22] Filed: **Aug. 23, 1982**

[51] **Int. Cl.**[3] **G08C 9/00**

[52] **U.S. Cl.** ..... **340/365 S**; 200/5 A; 340/365 R; 400/100

[58] **Field of Search** ..... 200/5 A, DIG. 1; 340/365 R, 365 S, 365 A, 365 D; 400/87, 88, 100, 101, 102, 472, 486, 489, 121, 94; 179/90 K

[56] **References Cited**

U.S. PATENT DOCUMENTS

3,225,883	12/1965	Ayres	400/100
3,312,892	4/1967	Parnes	323/93
3,702,957	11/1972	Wolfendale	317/246
4,103,252	7/1978	Bobick	331/48
4,118,611	10/1978	Harris	200/674
4,177,421	12/1979	Thornburg	324/61 R

FOREIGN PATENT DOCUMENTS

0033910	8/1981	European Pat. Off. .
1552753	9/1979	United Kingdom .
2048531	12/1980	United Kingdom .

Primary Examiner—John W. Caldwell, Sr.
Assistant Examiner—Michael F. Heim
Attorney, Agent, or Firm—Joseph S. Tripoli; George E. Haas; Allen LeRoy Limberg

[57] **ABSTRACT**

A touchbar or touchplate is supported on its edges by force-sensitive switches, such as push-button switches, each having a plurality of contacts opened or closed at different pressure thresholds. The pattern of which contact conditions of conduction or non-conduction is converted to logic ONES's and ZERO's and decoded to obtain indications to which a plurality of touchpoint regions on the touchbar or touchplate a user applies force.
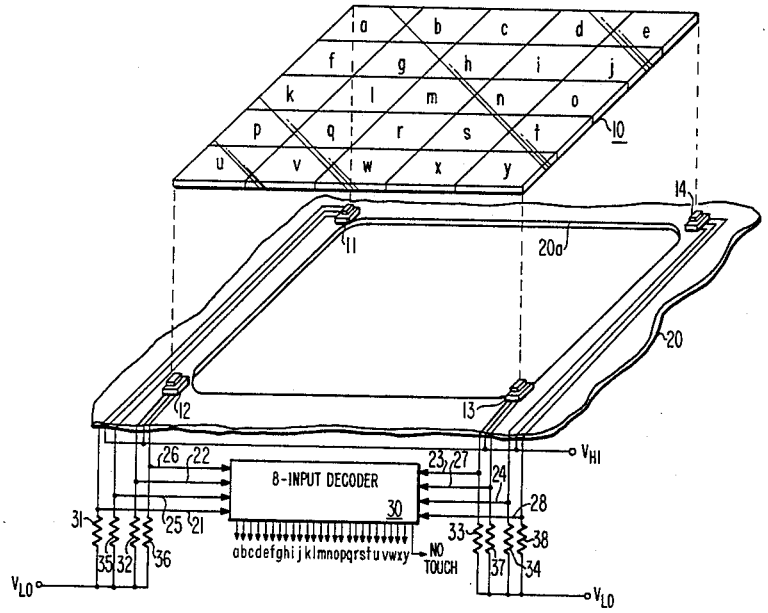
21 Claims, 16 Drawing Figures