United States Patent [19]

Tennant

[11] **4,242,762**

[45] **Jan. 6, 1981**

[54] **POSTERIOR ENCAPSULED IMPLANT LENS**

[76] Inventor: **Jerald L. Tennant,** 806 Greentree Ct., Duncanville, Tex. 75116

[21] Appl. No.: **60,595**

[22] Filed: **Jul. 25, 1979**

[51] **Int. Cl.**[3] **A61F 1/16;** A61F 1/24

[52] **U.S. Cl.** **3/13**

[58] **Field of Search** 3/13, 1

[56] **References Cited**

U.S. PATENT DOCUMENTS

3,673,616	7/1972	Fedorov et al.	3/13
3,711,870	1/1973	Deitrick	3/13
3,866,249	2/1975	Flom	3/13
3,906,551	9/1975	Otter	3/13
3,913,148	10/1975	Potthast	3/13
3,922,728	12/1975	Krasnov	3/13
3,925,825	12/1975	Richards et al.	3/13
3,971,073	7/1976	Richards et al.	3/13
3,986,214	10/1976	Krasnov	3/13
3,991,426	11/1976	Flom et al.	3/13
4,010,496	3/1977	Neefe	3/13
4,085,467	4/1978	Rainin et al.	3/13
4,087,866	5/1978	Choyce et al.	3/13
4,092,743	6/1978	Kelman	3/13
4,124,905	11/1978	Clark	3/13
4,127,903	12/1978	Schachar	3/13

FOREIGN PATENT DOCUMENTS

959314	3/1957	Fed. Rep. of Germany	3/13
1034325	7/1958	Fed. Rep. of Germany	3/13
1103399	5/1955	France	3/13

OTHER PUBLICATIONS

"The Intraocular Implant Lens Development and Results", published by the Williams & Wilkins Co., Baltimore, Md., 1975, pp. 16–23.

Primary Examiner—Ronald L. Frinks

Attorney, Agent, or Firm—Richards, Harris & Medlock

[57] **ABSTRACT**

An artificial intraocular lens (**10**) for encapsulation in the posterior chamber of an eye includes a generally triangular base element (**12**) with an optic element (**14**) positioned therein and a pin (**22**) extending outwardly from one corner thereof. Following extraction of the natural lens, the artificial lens (**10**) is positioned in the capsular sac with the optic element (**14**) posterior to the pupil and secured in place by a combination of tissue scarring within the capsular sac and superior clipping of the lens (**10**) to the iris with the pin (**22**). Another embodiment (**30**) includes an optic element (**34**) mounted in a support element (**32**) having two pins (**42**) extending outwardly from the corners thereof.
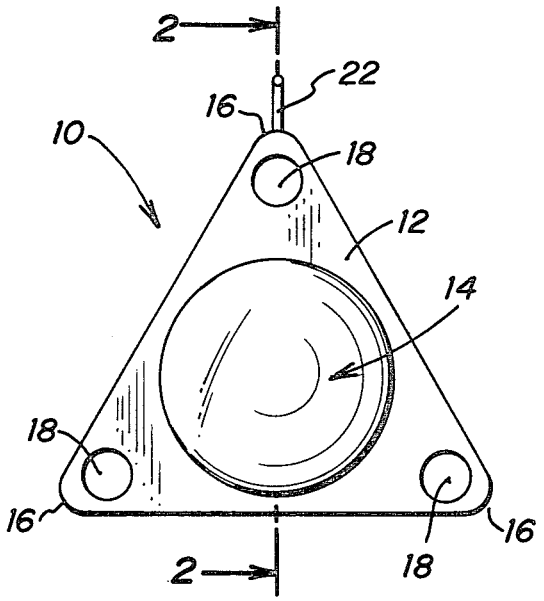
15 Claims, 6 Drawing Figures