Feb. 1, 1944. W. L. LUNDIN 2,340,762

VANITY DRAWER FOR CHIFFONIERS AND THE LIKE

Filed June 25, 1942 2 Sheets-Sheet 1

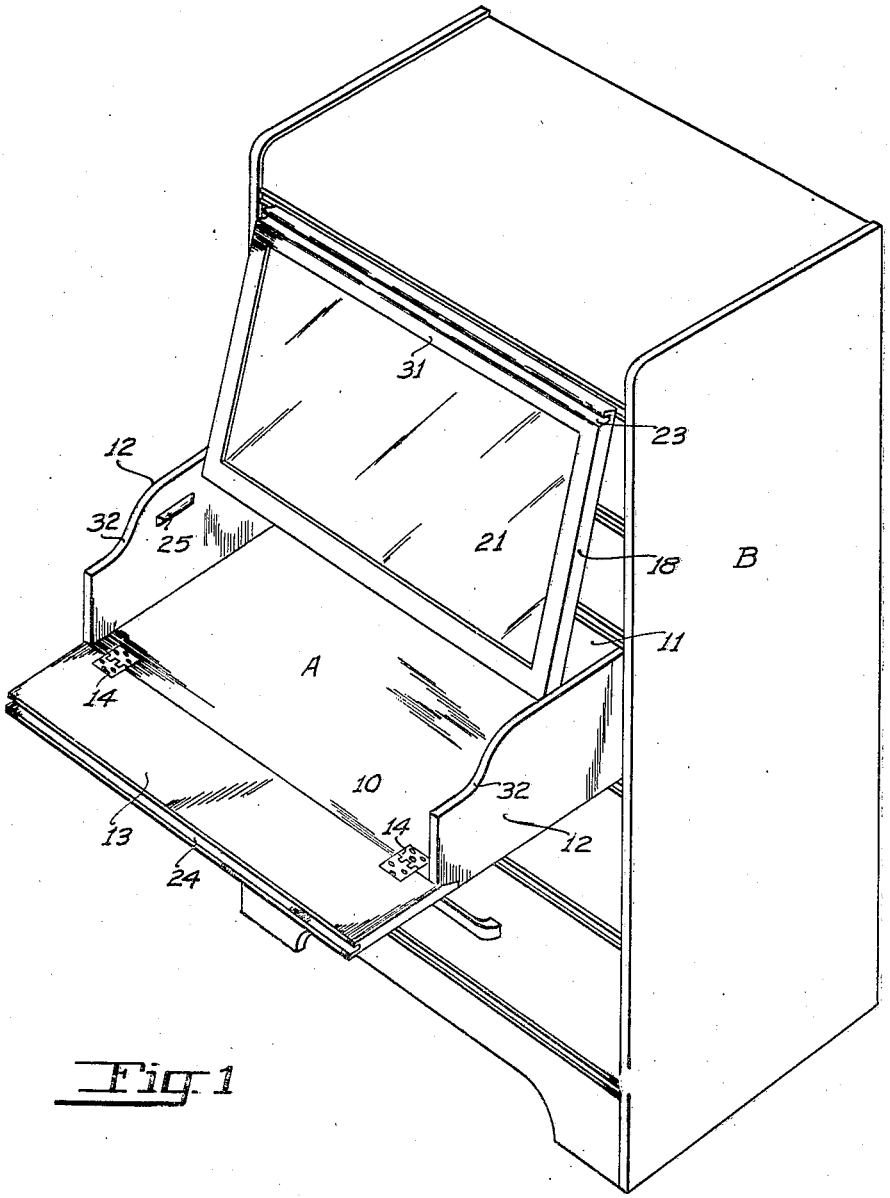

Fig. 1

WALFRED L. LUNDIN
INVENTOR

BY Geisler and Geisler.
ATTORNEYS