US00D537062S

(12) United States Design Patent

Kim et al.

(10) Patent No.: US D537,062 S
(45) Date of Patent: ** Feb. 20, 2007

(54) **PORTABLE PHONE**

(75) Inventors: **Eun-Young Kim**, Seoul (KR); **Jong-Seong Lee**, Seoul (KR); **Yang-Jic Lee**, Seoul (KR)

(73) Assignee: **Samsung Electronics Co., Ltd.**, Suwon-Si (KR)

(**) Term: **14 Years**

(21) Appl. No.: **29/236,926**

(22) Filed: **Aug. 25, 2005**

(30) **Foreign Application Priority Data**

Feb. 25, 2005 (KR) 30-2005-0006300

(51) **LOC (8) Cl.** **14-03**
(52) **U.S. Cl.** **D14/138**
(58) **Field of Classification Search** D14/137, D14/138, 147–148, 247–248, 144, 496, 156, D14/341–347, 191, 192; 379/433.01–433.13; 455/575.4, 566, 575.1, 556.1, 556.2, 90.3, 455/41.2; D21/329, 331, 333; D16/208
See application file for complete search history.

(56) **References Cited**

U.S. PATENT DOCUMENTS

D326,452 S * 5/1992 Roegner D14/138
D357,919 S * 5/1995 Tsui D14/218
D445,409 S * 7/2001 Segers D14/138
D456,805 S * 5/2002 Ono et al. D14/342
D457,883 S * 5/2002 Sugioka et al. D14/342
D460,448 S * 7/2002 Matsumoto D14/346
D464,963 S * 10/2002 Nishida D14/346
D465,219 S * 11/2002 Tamaki et al. D14/346
D477,596 S * 7/2003 Hayes D14/343
D479,234 S * 9/2003 Tanaka et al. D14/346
D495,695 S * 9/2004 Yugaya D14/346
D498,736 S * 11/2004 Lee D14/138
D501,475 S * 2/2005 Kim D14/346
D502,703 S * 3/2005 Tsujimoto et al. D14/346
D511,342 S * 11/2005 Chien D14/346
D515,060 S * 2/2006 Lee et al. D14/138
D517,042 S * 3/2006 Byun et al. D14/191
D519,998 S * 5/2006 Park D14/346

(Continued)

OTHER PUBLICATIONS

Pantech PG–3600V telephone, announced Feb. 2006, [online], [retrieved on May 30, 2006]. Retrieved from Internet, URL: <http://www.gsmarena.com>.*
O2 XDA Atom telephone, announced Nov. 2005, [online], [retrieved on May 5, 2006]. Retrieved from Internet, URL: <http://www.gsmerena.com>.*
Sharp TM100 telephone, announced First Quarter 2004, [online], [retrieved on Apr. 28, 2006]. Retrieved from Internet, URL: <http://www.gsmarena.com>.*
Virgin Player, review date Nov. 22, 2004, [online], [retrieved on Aug. 1, 2006]. Retrieved from Internet, URL: <http://www.pcmag.com>.*

Primary Examiner—Jeffrey Asch
(74) *Attorney, Agent, or Firm*—Staas & Halsey LLP

(57) **CLAIM**

The ornamental design for the portable phone, as shown and described.

DESCRIPTION

FIG. **1** is a perspective view of the portable phone showing our design;
FIG. **2** is a front view thereof;
FIG. **3** is a rear view thereof;
FIG. **4** is a left side view thereof;
FIG. **5** is a right side view thereof;
FIG. **6** is a top plan view thereof;
FIG. **7** is a bottom plan view thereof;
FIG. **8** is a front, partially open view thereof; and,
FIG. **9** is a rear view thereof with accessory removed and shown adjacent thereto.
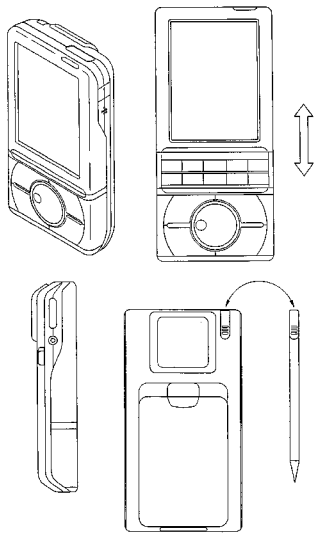
1 Claim, 6 Drawing Sheets