US009636162B2

(12) **United States Patent**
Crawford et al.

(10) **Patent No.: US 9,636,162 B2**
(45) **Date of Patent: May 2, 2017**

(54) **SURGICAL ROD BENDING SYSTEM AND METHOD**

(71) Applicants: **Neil R. Crawford**, Tempe, AZ (US); **Nicholas Theodore**, Paradise Valley, AZ (US); **Philip M. Reyes**, Mesa, AZ (US); **Anna G. U. S. Newcomb**, Tempe, AZ (US); **Seungwon Baek**, Phoenix, AZ (US)

(72) Inventors: **Neil R. Crawford**, Tempe, AZ (US); **Nicholas Theodore**, Paradise Valley, AZ (US); **Philip M. Reyes**, Mesa, AZ (US); **Anna G. U. S. Newcomb**, Tempe, AZ (US); **Seungwon Baek**, Phoenix, AZ (US)

(73) Assignee: **Dignity Health**, San Francisco, CA (US)

(*) Notice: Subject to any disclaimer, the term of this patent is extended or adjusted under 35 U.S.C. 154(b) by 203 days.

(21) Appl. No.: **14/362,417**

(22) PCT Filed: **Dec. 5, 2012**

(86) PCT No.: **PCT/US2012/067924**
§ 371 (c)(1),
(2) Date: **Jun. 3, 2014**

(87) PCT Pub. No.: **WO2013/085982**
PCT Pub. Date: **Jun. 13, 2013**

(65) **Prior Publication Data**

US 2014/0311203 A1 Oct. 23, 2014

Related U.S. Application Data

(60) Provisional application No. 61/566,891, filed on Dec. 5, 2011.

(51) **Int. Cl.**
B21D 7/06 (2006.01)
A61B 17/88 (2006.01)
(Continued)

(52) **U.S. Cl.**
CPC ***A61B 17/8863*** (2013.01); ***B21D 7/022*** (2013.01); ***B21D 43/006*** (2013.01);
(Continued)

(58) **Field of Classification Search**
CPC B21D 7/02; B21D 7/021; B21D 7/022; B21D 7/024; B21D 7/025; B21D 7/06;
(Continued)

(56) **References Cited**

U.S. PATENT DOCUMENTS

3,821,525 A * 6/1974 Eaton B21D 7/12 700/165
4,785,650 A 11/1988 Lusty
(Continued)

FOREIGN PATENT DOCUMENTS

WO 2011-055505 A1 5/2011

OTHER PUBLICATIONS

International Search Report and Written Opinion under date of Apr. 26, 2013 in connection with PCT/US12/067924.

Primary Examiner — Peter DungBa Vo
Assistant Examiner — Joshua D Anderson
(74) *Attorney, Agent, or Firm* — Quarles & Brady LLP

(57) **ABSTRACT**
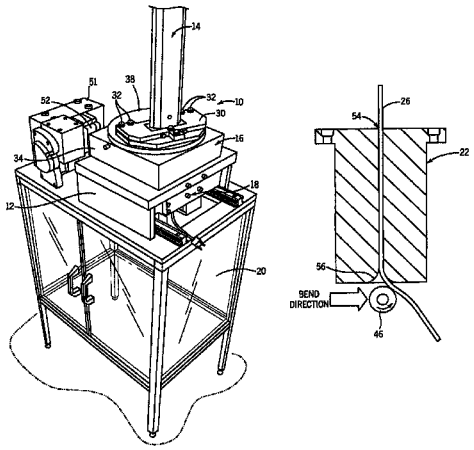
System and method for automatically bending a surgical rod are provided. The system includes a linear movement device configured to axially feed the surgical rod, a rotational movement device configured to rotate the surgical rod as it is axially fed, and a bending device including a roller to
(Continued)