7/9/85 OK 4,527,862

United States Patent [19]

Arakawa

[11] **Patent Number: 4,527,862**

[45] **Date of Patent: Jul. 9, 1985**

[54] **LIQUID CRYSTAL DISPLAY KEYBOARD**

[75] Inventor: **Kazuhiro Arakawa**, Yamato, Japan

[73] Assignee: **Canon Kabushiki Kaisha**, Tokyo, Japan

[21] Appl. No.: **556,992**

[22] Filed: **Dec. 1, 1983**

[30] **Foreign Application Priority Data**

Dec. 3, 1982 [JP] Japan 57-211297

[51] **Int. Cl.**[3] **G02F 1/13**

[52] **U.S. Cl.** ..... **350/334**; 350/331 R; 350/339 R

[58] **Field of Search** ..... 350/331 R, 334, 332, 350/339 R

[56] **References Cited**

U.S. PATENT DOCUMENTS

3,956,745	5/1976	Ellis	350/331 R X
4,017,848	4/1977	Tannas, Jr.	350/334 X
4,078,257	3/1978	Bagley	350/334 X
4,224,615	9/1980	Penz	350/331 R X
4,313,108	1/1982	Yoshida	350/331 R X

Primary Examiner—John K. Corbin
Assistant Examiner—Richard Gallivan
Attorney, Agent, or Firm—Fitzpatrick, Cella, Harper & Scinto

[57] **ABSTRACT**

A liquid crystal display keyboard has a keyboard which is arranged on a liquid crystal display and has upper and lower conductive films each having transparent electrodes arranged in spaced and facing relation to each other. An elastic member is arranged on the upper transparent conductive film.
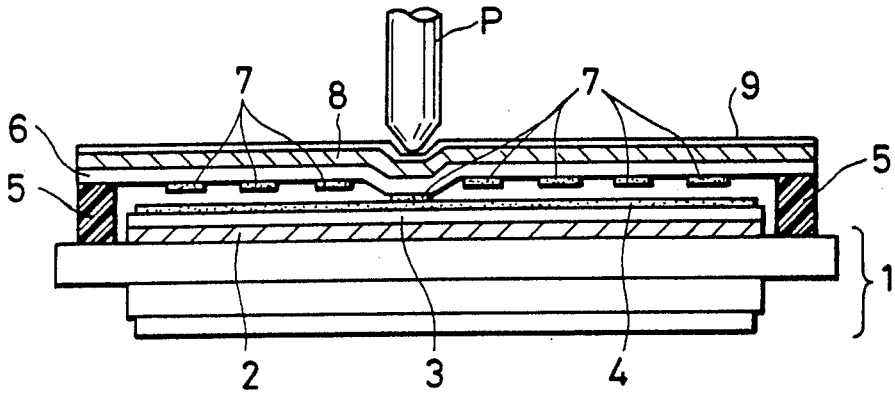
5 Claims, 5 Drawing Figures