US008024762B2

(12) **United States Patent**
Britt

(10) **Patent No.: US 8,024,762 B2**
(45) **Date of Patent: Sep. 20, 2011**

(54) **METHODS AND APPARATUS FOR PROVIDING VIRTUAL CONTENT OVER A NETWORK**

(75) Inventor: **Glenn Britt**, New York, NY (US)

(73) Assignee: **Time Warner Cable Inc.**, New York, NY (US)

(*) Notice: Subject to any disclaimer, the term of this patent is extended or adjusted under 35 U.S.C. 154(b) by 892 days.

(21) Appl. No.: **11/811,953**

(22) Filed: **Jun. 11, 2007**

(65) **Prior Publication Data**

US 2008/0092181 A1 Apr. 17, 2008

Related U.S. Application Data

(60) Provisional application No. 60/813,479, filed on Jun. 13, 2006.

(51) **Int. Cl.**
H04N 7/173 (2006.01)

(52) **U.S. Cl.** **725/92**; 725/93; 725/94

(58) **Field of Classification Search** 725/92–94
See application file for complete search history.

(56) **References Cited**

U.S. PATENT DOCUMENTS

6,934,880	B2	8/2005	Hofner	
7,231,669	B2	6/2007	Leung	
7,233,948	B1	6/2007	Shamoon	
7,240,196	B2	7/2007	Cooper	
7,266,198	B2	9/2007	Medvinsky	
7,269,854	B2	9/2007	Simmons	
7,301,944	B1	11/2007	Redmond	
7,337,147	B2	2/2008	Chen	
2003/0056217	A1	3/2003	Brooks	
2003/0217365	A1	11/2003	Caputo	
2003/0226150	A1	12/2003	Berberet	
2004/0268386	A1*	12/2004	Logan et al.	725/34
2005/0022242	A1	1/2005	Rosetti	
2006/0036750	A1	2/2006	Ladd	
2006/0047957	A1	3/2006	Helms	
2006/0130107	A1	6/2006	Gonder	
2006/0130113	A1	6/2006	Carlucci	
2006/0218604	A1	9/2006	Riedl	
2007/0022459	A1	1/2007	Gaebel	
2007/0094691	A1	4/2007	Gazdzinski	
2007/0204300	A1	8/2007	Markley	
2007/0204311	A1	8/2007	Hasek	
2007/0204314	A1	8/2007	Hasek	
2007/0217436	A1	9/2007	Markley	
2007/0276925	A1	11/2007	La Joie	
2007/0276926	A1	11/2007	La Joie	
2008/0040758	A1	2/2008	Beetcher	

* cited by examiner

Primary Examiner — Hunter B Lonsberry
(74) *Attorney, Agent, or Firm* — Gazdzinski & Associates, PC

(57) **ABSTRACT**

Methods and apparatus for selecting, purchasing and delivering content to users of a network so that the user has "virtual" ownership of and access to the content, thereby obviating the need for physical media (e.g., DVDs or CDs). In an exemplary embodiment, the network comprises a hybrid fiber coax (HFC) network, and on-demand (OD) sessions or broadcast modes are used to deliver the virtual content stored at the head-end (or hub site) to the requesting owner. The purchased content is associated with one or more users when stored, thereby providing the owner(s) unlimited access thereto, without the costs and effort associated with renting/purchasing and maintaining DVDs. The content may also comprise new release content, which would otherwise not be available over the network at that time but for the purchase and delivery mechanisms of the invention. Various other complementary features for enhancing the user's virtual ownership experience are also disclosed.
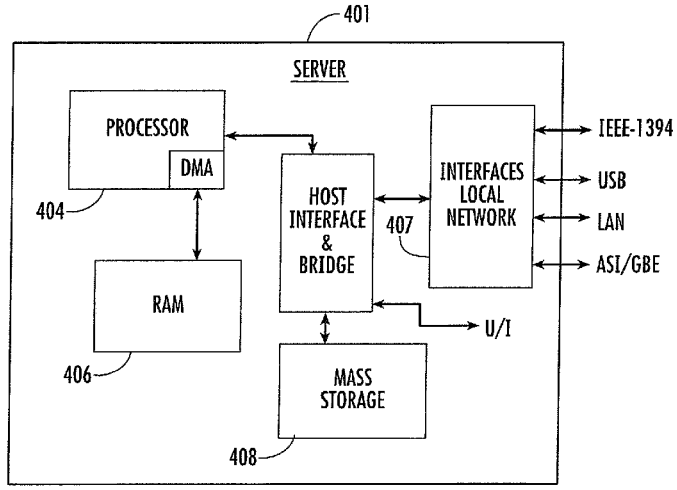
20 Claims, 19 Drawing Sheets