US009410362B1

(12) **United States Patent**
Champlin

(10) **Patent No.: US 9,410,362 B1**
(45) **Date of Patent: Aug. 9, 2016**

(54) **THERMAL BREAK SYSTEM**

(71) Applicant: **Richard S Champlin**, Granger, IN (US)

(72) Inventor: **Richard S Champlin**, Granger, IN (US)

(*) Notice: Subject to any disclaimer, the term of this patent is extended or adjusted under 35 U.S.C. 154(b) by 0 days.

(21) Appl. No.: **14/601,360**

(22) Filed: **Jan. 21, 2015**

(51) **Int. Cl.**

E06B 3/26	(2006.01)
E06B 7/28	(2006.01)
E06B 1/04	(2006.01)
E06B 1/56	(2006.01)

(52) **U.S. Cl.**
CPC ... ***E06B 7/28*** (2013.01); ***E06B 1/04*** (2013.01); ***E06B 1/56*** (2013.01)

(58) **Field of Classification Search**
CPC E06B 1/04; E06B 1/56; E06B 7/28
USPC ..... 52/202, 203, DIG. 4, 717.01, 717.02; 49/62, 463–466
See application file for complete search history.

(56) **References Cited**

U.S. PATENT DOCUMENTS

4,409,758	A *	10/1983	Dickerson	E06B 3/28 160/231.2
8,863,440	B1 *	10/2014	Champlin	F41H 5/013 52/1
2007/0199259	A1 *	8/2007	Parsley	G08B 13/04 52/203
2009/0133342	A1 *	5/2009	Copeland	E04B 9/003 52/202
2015/0184444	A1 *	7/2015	Wexler	E06B 3/285 52/203
2015/0376938	A1 *	12/2015	Pardue	E06B 3/28 52/202

* cited by examiner

Primary Examiner — William Gilbert
(74) *Attorney, Agent, or Firm* — Botkin & Hall, LLP

(57) **ABSTRACT**

A thermal window system is provided where a cap is placed over an existing window frame. A top groove and a bottom groove are attached, along with side stops. A thermal window pane has a sash that surrounds another window pane. The sash fits into the top and bottom groove and overlays the side stops. The sash is held tightly to the side stops using magnetic attraction.
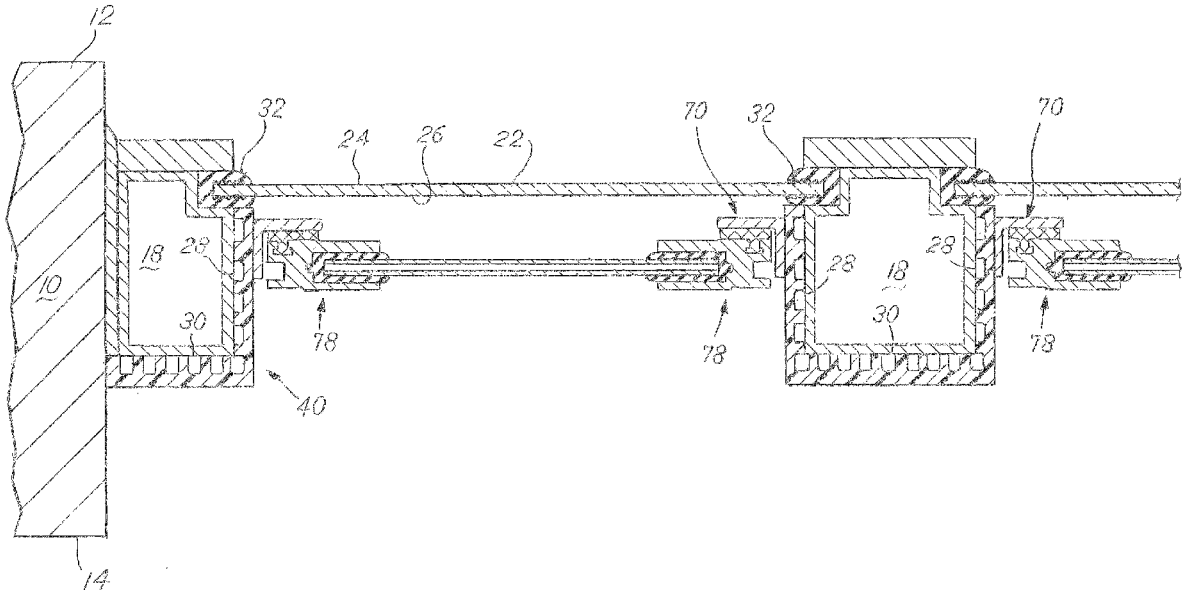
20 Claims, 7 Drawing Sheets