US009410262B2

(12) **United States Patent**
Lobmeyer et al.

(10) **Patent No.: US 9,410,262 B2**
(45) **Date of Patent: Aug. 9, 2016**

(54) **METHOD FOR PRODUCING A SILICON SINGLE CRYSTAL**

(71) Applicant: **Siltronic AG**, Munich (DE)

(72) Inventors: **Josef Lobmeyer**, Bad Fuessing (DE); **Georg Brenninger**, Oberbergkirchen (DE); **Waldemar Stein**, Burghausen (DE)

(73) Assignee: **SILTRONIC AG**, Munich (DE)

(*) Notice: Subject to any disclaimer, the term of this patent is extended or adjusted under 35 U.S.C. 154(b) by 383 days.

(21) Appl. No.: **13/969,818**

(22) Filed: **Aug. 19, 2013**

(65) **Prior Publication Data**

US 2014/0060421 A1 Mar. 6, 2014

(30) **Foreign Application Priority Data**

Sep. 4, 2012 (DE) 10 2012 215 677

(51) **Int. Cl.**

C30B 13/08	(2006.01)
C30B 13/20	(2006.01)
C30B 29/06	(2006.01)
C30B 13/10	(2006.01)

(52) **U.S. Cl.**

CPC ***C30B 13/20*** (2013.01); ***C30B 13/08*** (2013.01); ***C30B 13/10*** (2013.01); ***C30B 29/06*** (2013.01)

(58) **Field of Classification Search**

CPC C30B 13/08; C30B 13/10; C30B 13/32
See application file for complete search history.

(56) **References Cited**

U.S. PATENT DOCUMENTS

5,499,598	A *	3/1996	Oda	C30B 29/06 117/37
6,251,182	B1	6/2001	Luna et al.	
7,326,297	B2 *	2/2008	Abrosimov	C30B 13/20 117/18
2003/0145781	A1 *	8/2003	Von Ammon	C30B 13/08 117/49
2011/0095018	A1	4/2011	von Ammon et al.	
2011/0107960	A1	5/2011	von Ammon et al.	
2013/0112134	A1 *	5/2013	Spencer	C30B 15/20 117/13

FOREIGN PATENT DOCUMENTS

DE	4416543	A1	11/1994
DE	10 2009 051 010	A1	5/2011
JP	09-142988	A	6/1997
JP	2011-102234	A	5/2011

* cited by examiner

Primary Examiner — Robert M Kunemund
(74) *Attorney, Agent, or Firm* — Brooks Kushman P.C.

(57) **ABSTRACT**

A silicon single crystal is produced by a method wherein
a silicon plate is inductively heated;
granular silicon is melted on the silicon plate; and
the molten silicon thus produced flows through a flow conduit in the center of the plate to a phase boundary at which a silicon single crystal crystallizes, wherein a silicon ring having a lower resistivity than the plate, and lying on the plate, is inductively heated prior to inductively heating the plate, and melting the ring.
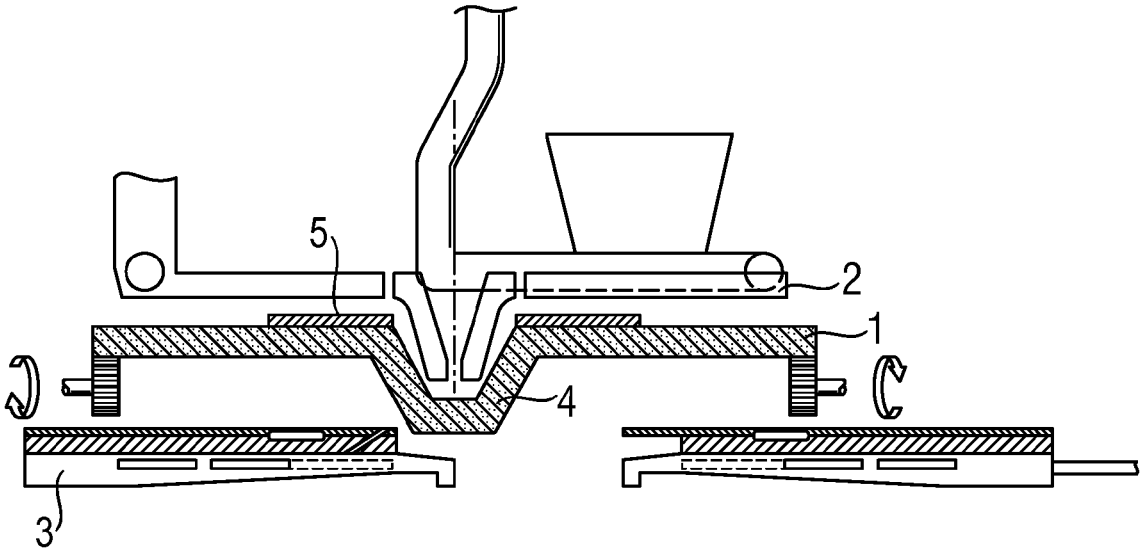
17 Claims, 1 Drawing Sheet