US009409562B2

(12) **United States Patent**
Choi et al.

(10) **Patent No.: US 9,409,562 B2**
(45) **Date of Patent: Aug. 9, 2016**

(54) **TORQUE ASSIST SYSTEM AND AUTOMATED MANUAL TRANSMISSION UTILIZING THE SAME**

(71) Applicant: **HYUNDAI WIA CORPORATION**, Gyeongsangnam-do (KR)

(72) Inventors: **Min Sik Choi**, Gyeonggi-do (KR); **Jae Sik Park**, Gyeonggi-do (KR); **Jae Woon Shin**, Gyeonggi-do (KR)

(73) Assignee: **HYUNDAI WIA CORPORATION**, Gyeongsangnam-do (KR)

(*) Notice: Subject to any disclaimer, the term of this patent is extended or adjusted under 35 U.S.C. 154(b) by 29 days.

(21) Appl. No.: **14/138,537**

(22) Filed: **Dec. 23, 2013**

(65) **Prior Publication Data**

US 2014/0187380 A1 Jul. 3, 2014

(30) **Foreign Application Priority Data**

Dec. 28, 2012 (KR) 10-2012-0156091

(51) **Int. Cl.**

F16H 3/04	(2006.01)
F16H 3/38	(2006.01)
B60W 10/11	(2012.01)
B60W 10/02	(2006.01)
B60W 10/06	(2006.01)
F16H 3/00	(2006.01)
F16H 3/093	(2006.01)
F16H 61/04	(2006.01)

(52) **U.S. Cl.**

CPC ***B60W 10/11*** (2013.01); ***B60W 10/02*** (2013.01); ***B60W 10/06*** (2013.01); ***F16H 3/006*** (2013.01); ***F16H 3/093*** (2013.01); ***F16H 61/04*** (2013.01); *B60Y 2400/71* (2013.01); *F16H 2003/0931* (2013.01); *F16H 2061/0425* (2013.01); *F16H 2061/0429* (2013.01); *F16H 2200/0052* (2013.01); *Y10T 477/6403* (2015.01)

(58) **Field of Classification Search**

CPC F16H 2061/0429; F16H 2061/0425; B60Y 2400/71

See application file for complete search history.

(56) **References Cited**

U.S. PATENT DOCUMENTS

7,114,409	B2 *	10/2006	Eggert et al.	74/331
7,210,367	B2 *	5/2007	Akutagawa	74/340
2007/0265126	A1 *	11/2007	Janson et al.	475/5
2010/0081536	A1 *	4/2010	Braford, Jr.	475/303
2011/0300983	A1 *	12/2011	Kurokawa	475/5
2012/0065014	A1 *	3/2012	Puiu et al.	475/5
2012/0065016	A1 *	3/2012	Tamai et al.	475/5

FOREIGN PATENT DOCUMENTS

JP	2005-207487	8/2005
JP	2006-132755	5/2006
JP	2011-020507	2/2011
KR	10-2012-0072994	7/2012

* cited by examiner

Primary Examiner — Ramya Burgess
Assistant Examiner — Lillian Nguyen

(57) **ABSTRACT**

The torque assist system of the present invention includes a torque assist shaft having a first terminating part connected to the input shaft, an outer shaft and an inner shaft rotating independently from the outer shaft; a planetary gear set mounted on the inner shaft exposed to a second terminating part of the torque assist shaft; a clutch being disposed adjacent to the planetary gear set and operated by an external force; and an input gear mounted on the exposed inner shaft of the torque assist shaft and connected to the planetary gear set by the clutch to transmit power to an output gear mounted on the output shaft of the vehicle transmission.
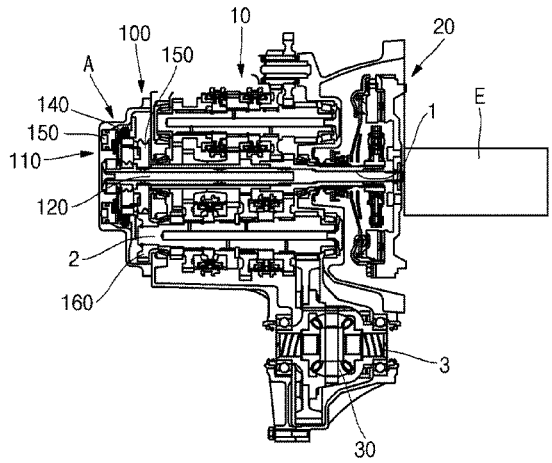
12 Claims, 8 Drawing Sheets