US009409362B2

(12) **United States Patent**
Kim et al.

(10) **Patent No.: US 9,409,362 B2**
(45) **Date of Patent: *Aug. 9, 2016**

(54) **GOLF BALL MOLDS AND RELATED SYSTEMS**

(71) Applicant: **Taylor Made Golf Company, Inc.**, Carlsbad, CA (US)

(72) Inventors: **Hyun J. Kim**, Carlsbad, CA (US); **Jaerim Kim**, San Diego, CA (US)

(73) Assignee: **Taylor Made Golf Company, Inc.**, Carlsbad, CA (US)

(*) Notice: Subject to any disclaimer, the term of this patent is extended or adjusted under 35 U.S.C. 154(b) by 555 days.

This patent is subject to a terminal disclaimer.

(21) Appl. No.: **13/802,287**

(22) Filed: **Mar. 13, 2013**

(65) **Prior Publication Data**

US 2014/0077414 A1 Mar. 20, 2014

Related U.S. Application Data

(60) Provisional application No. 61/702,675, filed on Sep. 18, 2012.

(51) **Int. Cl.**

B29C 45/14	(2006.01)
B29C 45/27	(2006.01)
B29D 99/00	(2010.01)
B29L 31/54	(2006.01)

(52) **U.S. Cl.**

CPC ***B29D 99/0042*** (2013.01); ***B29C 45/14819*** (2013.01); ***B29C 45/2708*** (2013.01); *B29C 45/14073* (2013.01); *B29L 2031/546* (2013.01)

(58) **Field of Classification Search**

CPC B29C 45/14073; B29C 2045/14081; B29C 45/14819; B29C 45/2708; B29C 45/2735; B29L 2031/546; B29D 99/0042

USPC 425/116, 129.1

See application file for complete search history.

(56) **References Cited**

U.S. PATENT DOCUMENTS

2,076,412 A * 4/1937 Oldham B29C 45/14819 264/275
2,178,774 A * 11/1939 Bogoslowsky B29C 33/126 264/278
2,203,377 A * 6/1940 Young B29D 99/0042 156/161
3,068,522 A * 12/1962 Nickerson B29C 33/424 264/275
3,264,272 A 8/1966 Rees
3,287,767 A * 11/1966 Ford B29C 33/12 249/83
3,359,249 A * 12/1967 Kleiner C08F 2/02 522/182
3,492,245 A 1/1970 Calderon et al.
3,804,803 A 4/1974 Streck et al.
5,827,548 A * 10/1998 Lavallee B29C 45/14073 264/275
6,093,360 A * 7/2000 Inoue B29C 45/14819 264/278
6,100,321 A 8/2000 Chen
6,190,597 B1 * 2/2001 Inoue A63B 37/0003 264/275
6,319,451 B1 * 11/2001 Brune B29C 45/14073 264/275
6,329,458 B1 12/2001 Takesue et al.

(Continued)

Primary Examiner — Robert B Davis

(74) *Attorney, Agent, or Firm* — Klarquist Sparkman, LLP

(57) **ABSTRACT**

Golf balls and systems for applying one or more polymer layers to a golf ball construct are disclosed. As but one example of disclosed systems, a method of forming a golf ball construct includes positioning a core or mantle portion of a golf ball in a cavity, opening a valve gate adjacent the cavity to cause viscous polymer to flow through the valve gate, into a short runner and into one or more radial runners that at least partially surround a circumference of the cavity. The polymer layer is allowed to solidify to form a solidified polymer layer, and the golf ball construct is removed from the mold cavity.
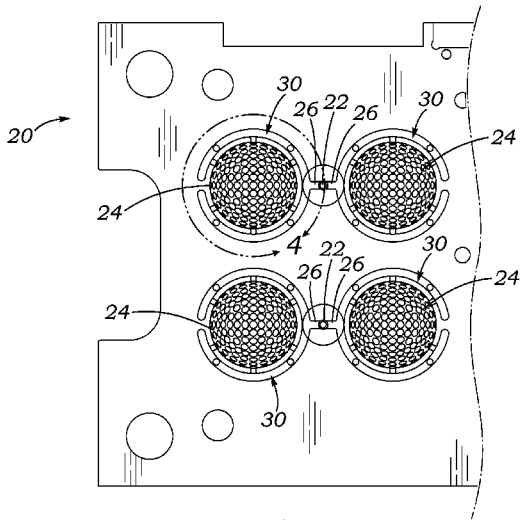
11 Claims, 7 Drawing Sheets